S102
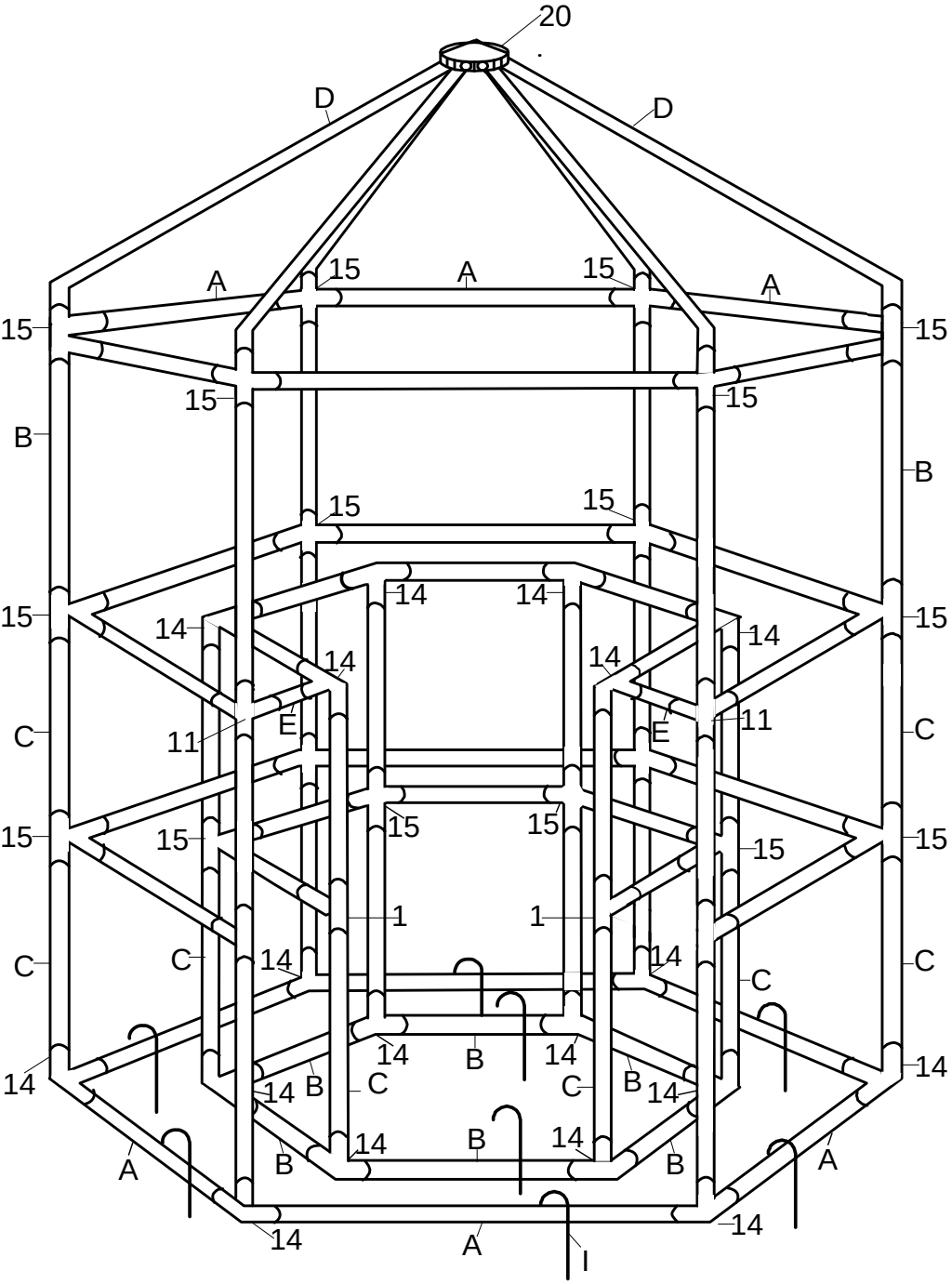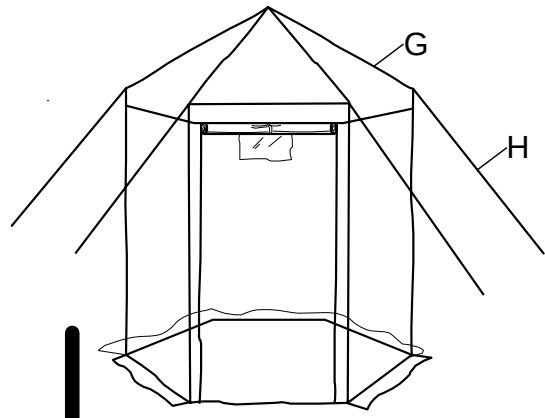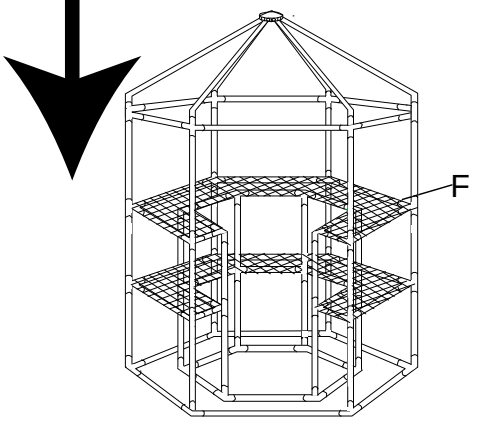
NO.		QTY
A	940mm	22
B	620mm	22
C	535mm	24
D		6
E		2
F		10
G		1
H		4
I		12
20		1
15		18
14		18
11		2
1		4