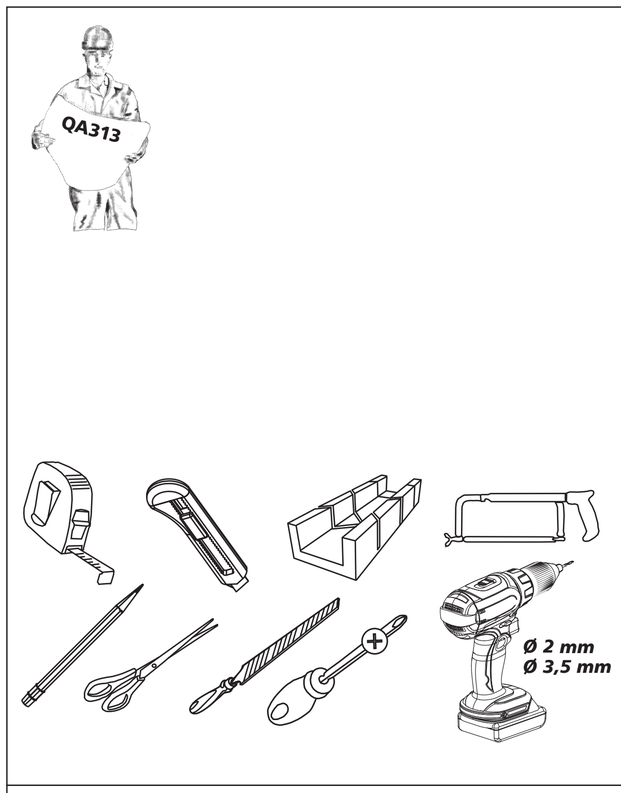
QA313
Ø 2 mm
Ø 3,5 mm

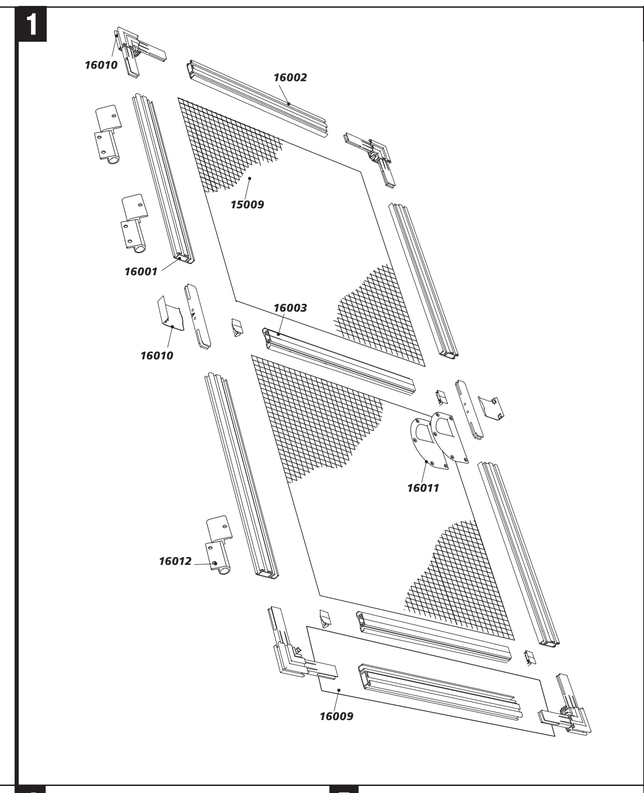
1
16010
16002
15009
16001
16003
16010
16011
16012
16009

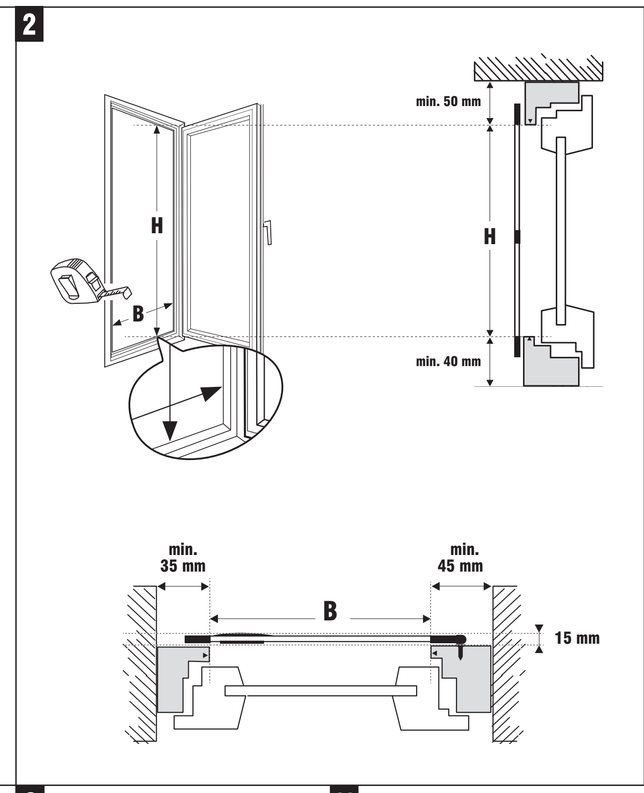
2
min. 50 mm
H
H
B
min. 40 mm
min.
35 mm
min.
45 mm
B
15 mm

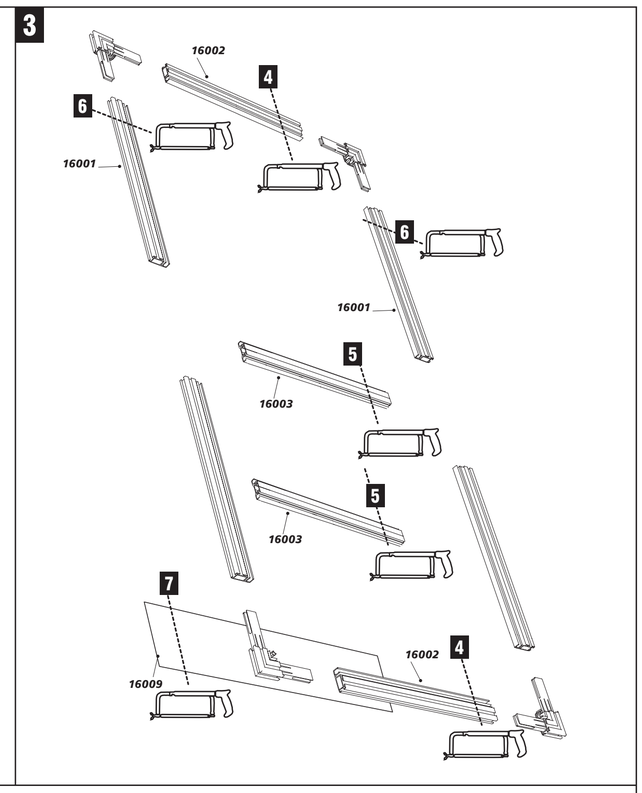
3
16002
4
6
16001
6
16001
5
16003
5
16003
7
16009
16002
4

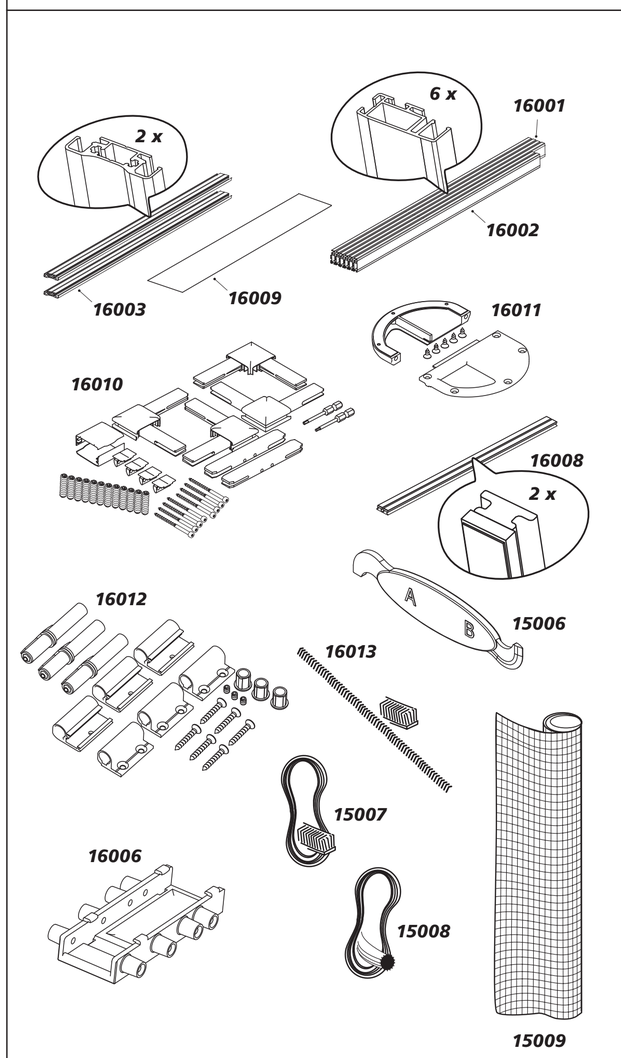
2 x
6 x
16001
16002
16003
16009
16011
16010
16008
2 x
16012
15006
16013
15007
16006
15008
15009

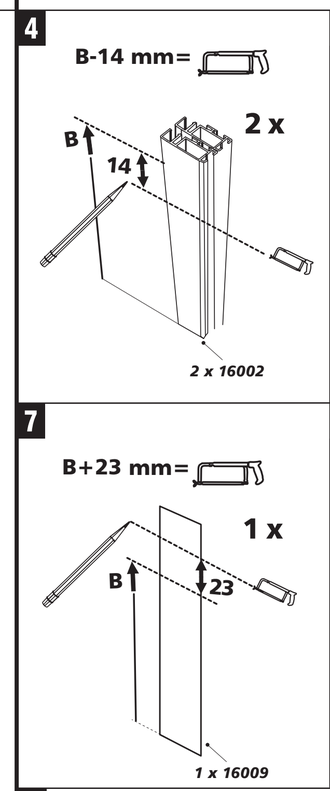
4
B-14 mm=
2 x
B
14
2 x 16002

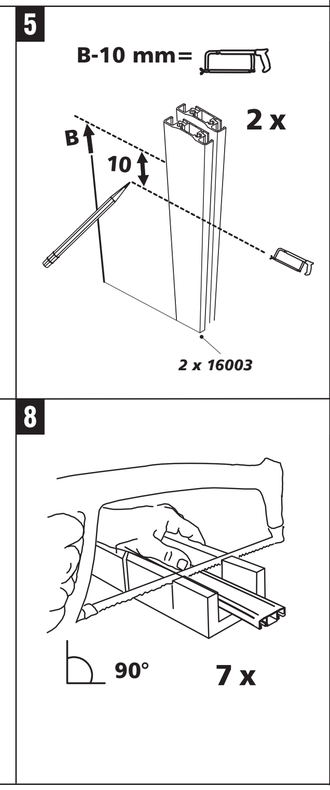
5
B-10 mm=
2 x
B
10
2 x 16003

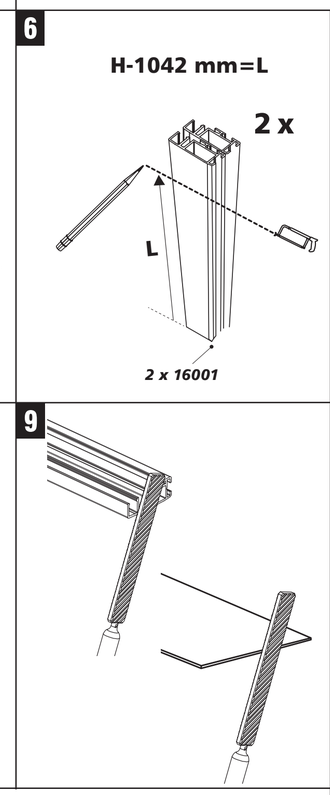
6
H-1042 mm=L
2 x
L
2 x 16001

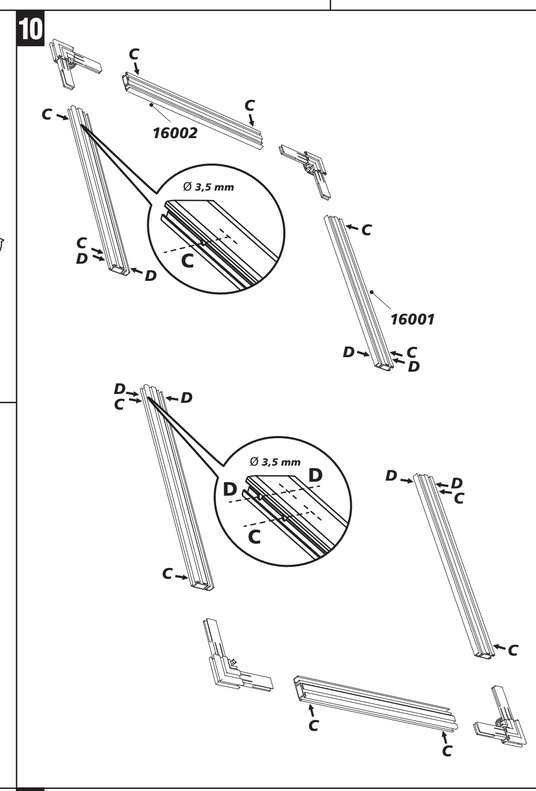
10
C
C
16002
C
Ø 3,5 mm
C
C
D
D
C
16001
D
C
D
D
C
D
Ø 3,5 mm
D
D
C
D
C
C
C
C

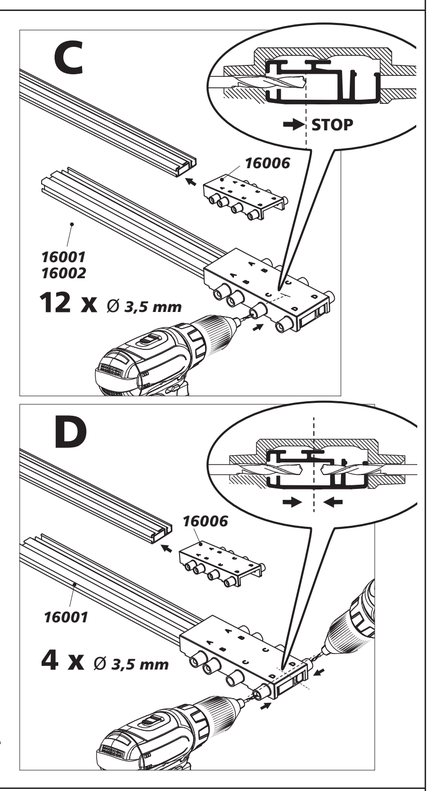
C
STOP
16006
16001
16002
12 x Ø 3,5 mm
D
16006
16001
4 x Ø 3,5 mm

7
B+23 mm=
1 x
B
23
1 x 16009

8
90°
7 x

9

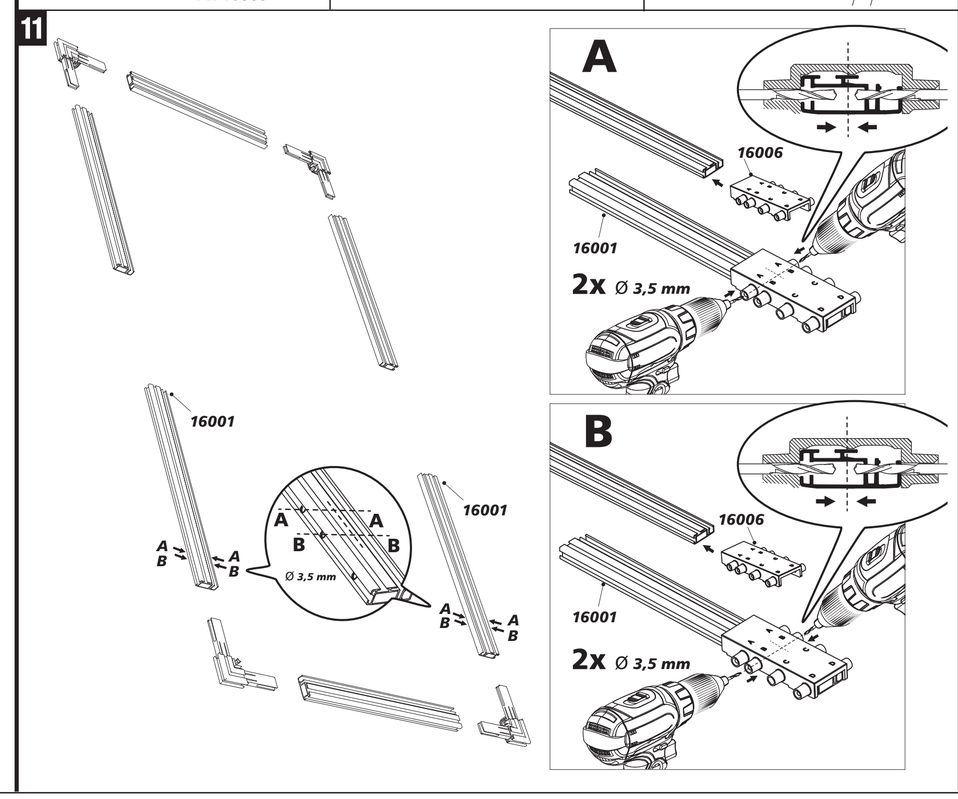
11
16001
A
B
A
B
A
B
A
B
Ø 3,5 mm
16001
A
B
A
B
A
B
A
B
A
16006
16001
2x Ø 3,5 mm
B
16006
16001
2x Ø 3,5 mm

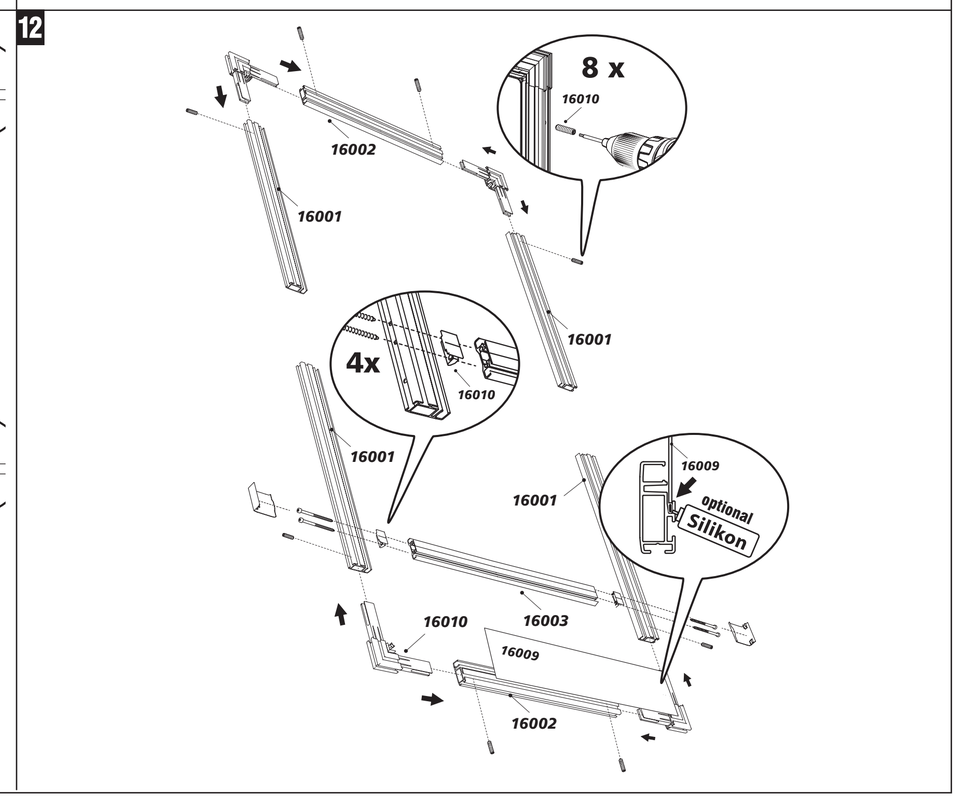
12
8 x
16010
16002
16001
16001
4x
16010
16001
16009
optional
Silikon
16001
16010
16003
16009
16002

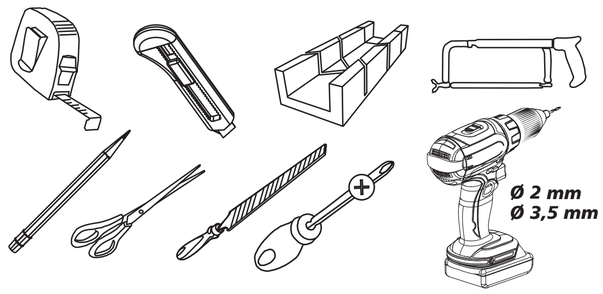

13

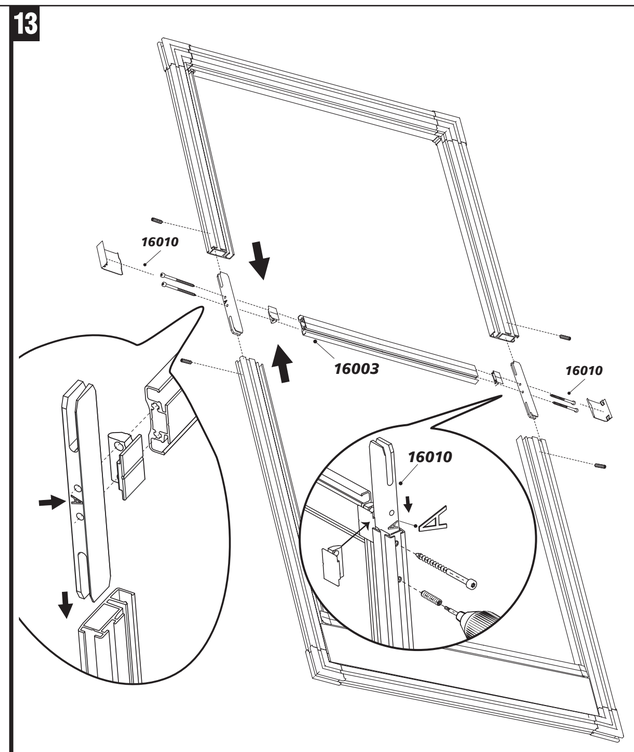

14

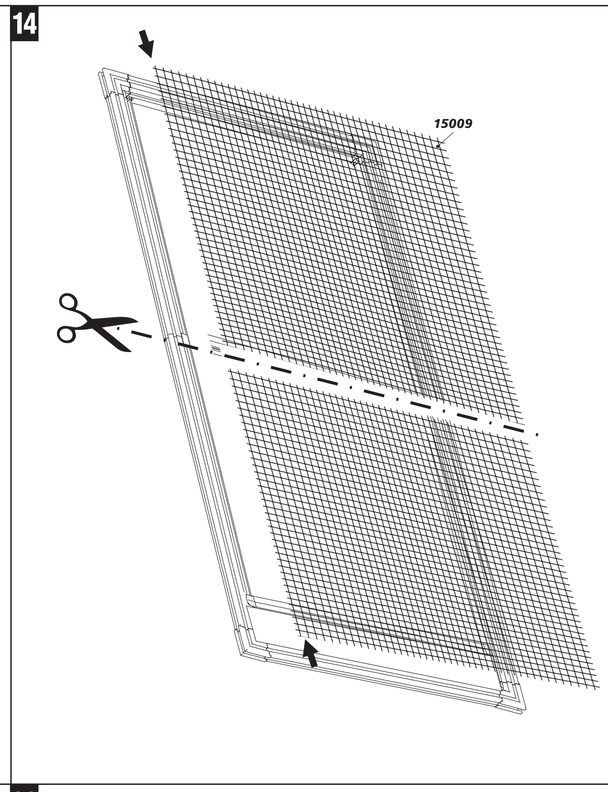

15

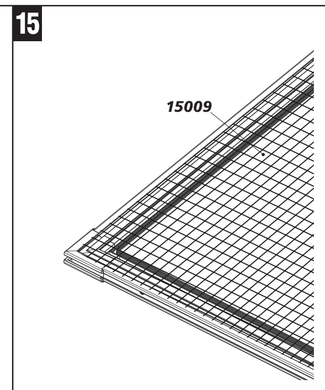

16

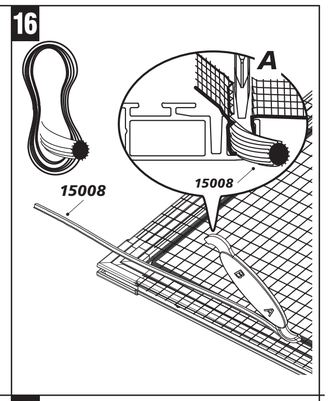

17

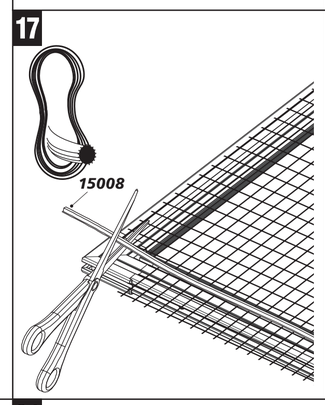

18

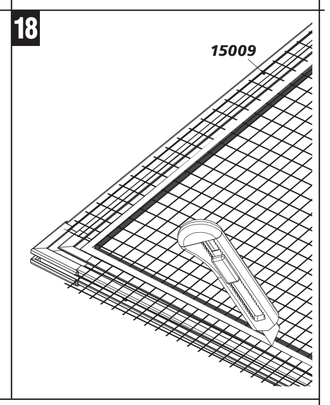

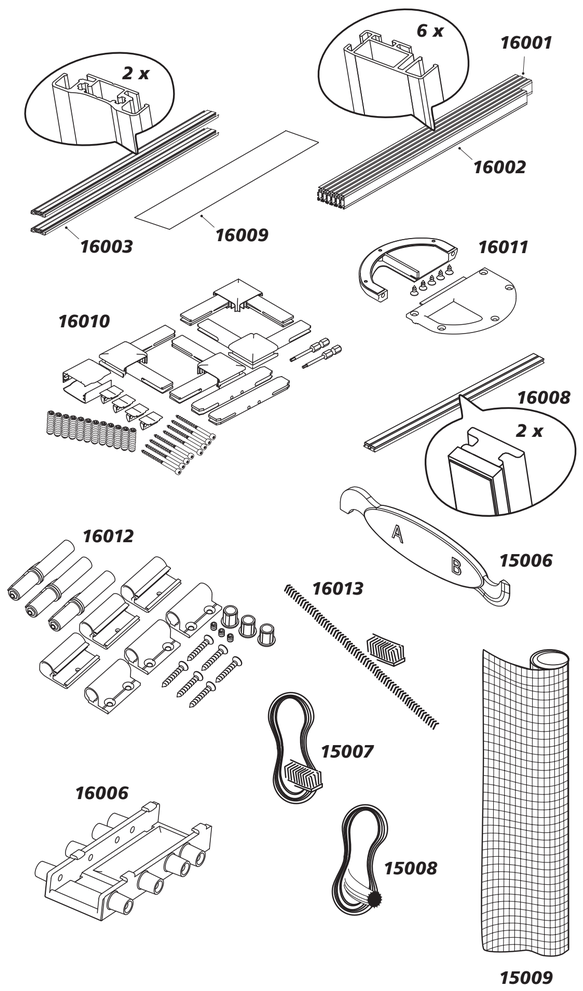

19

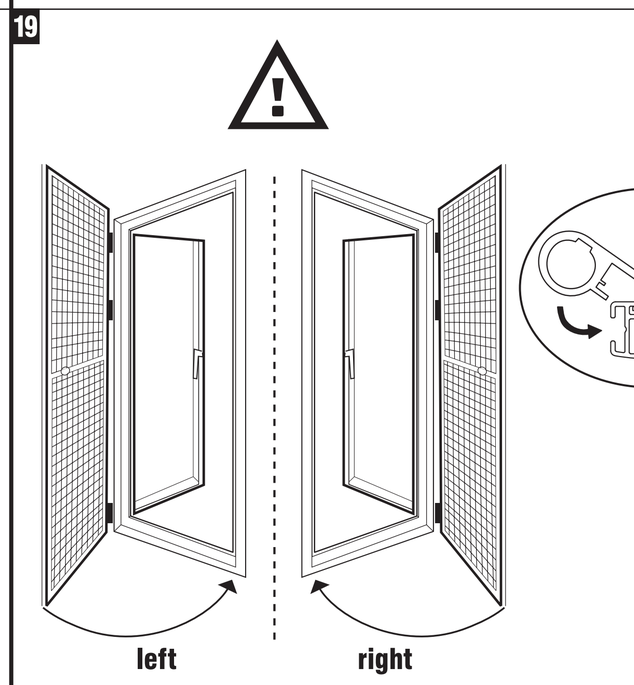

20

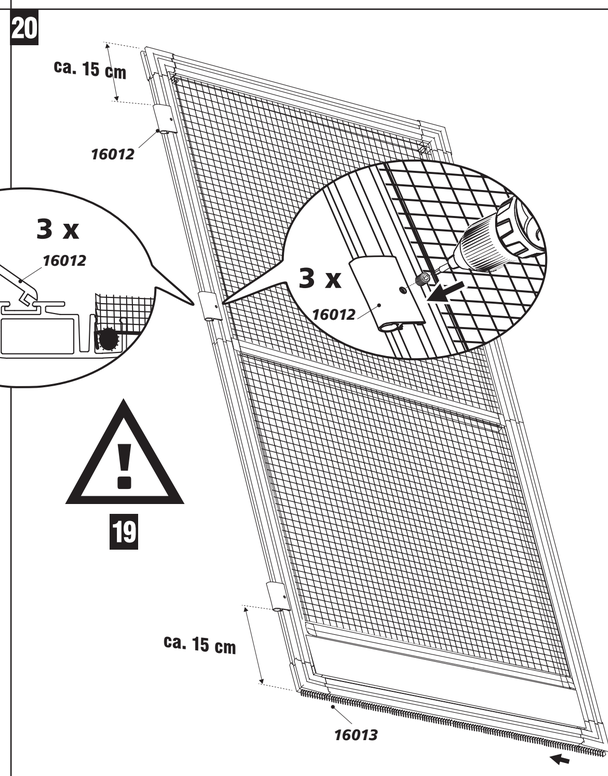

21

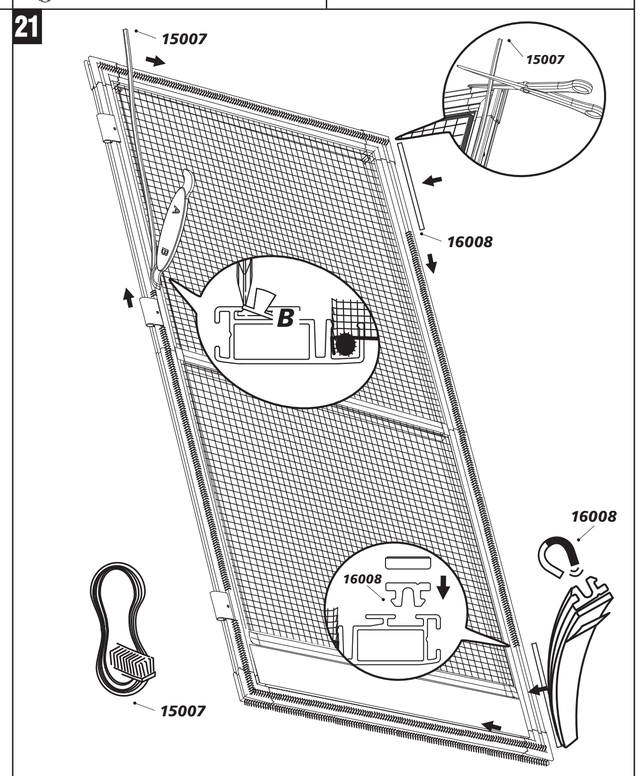

22

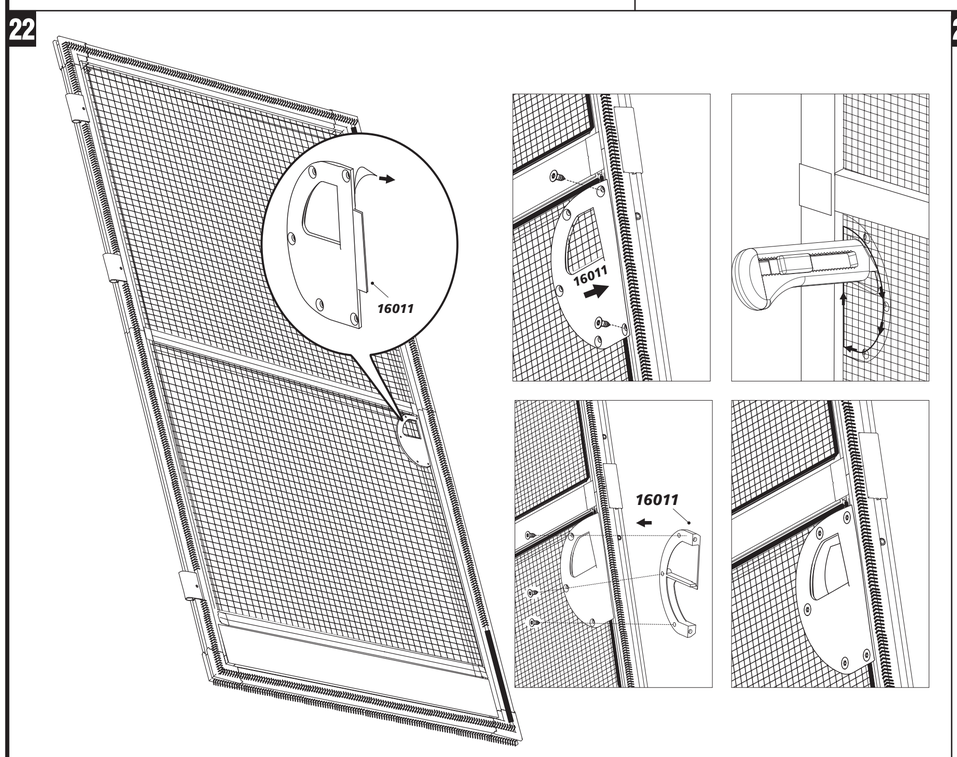
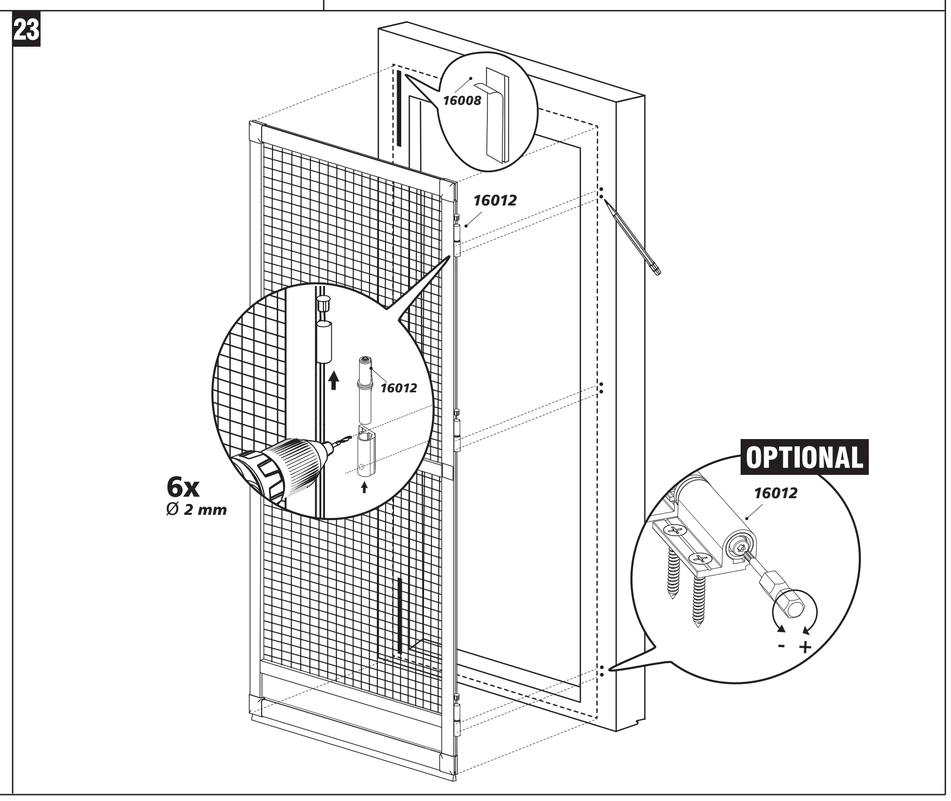
23