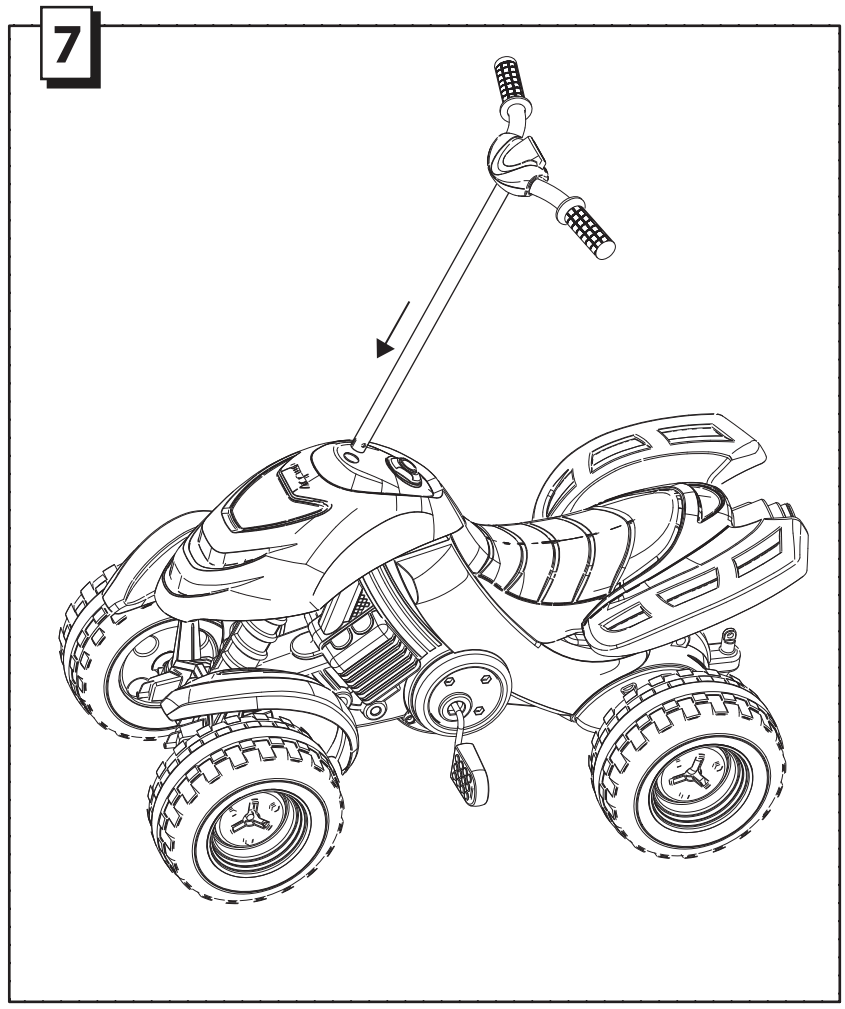
7

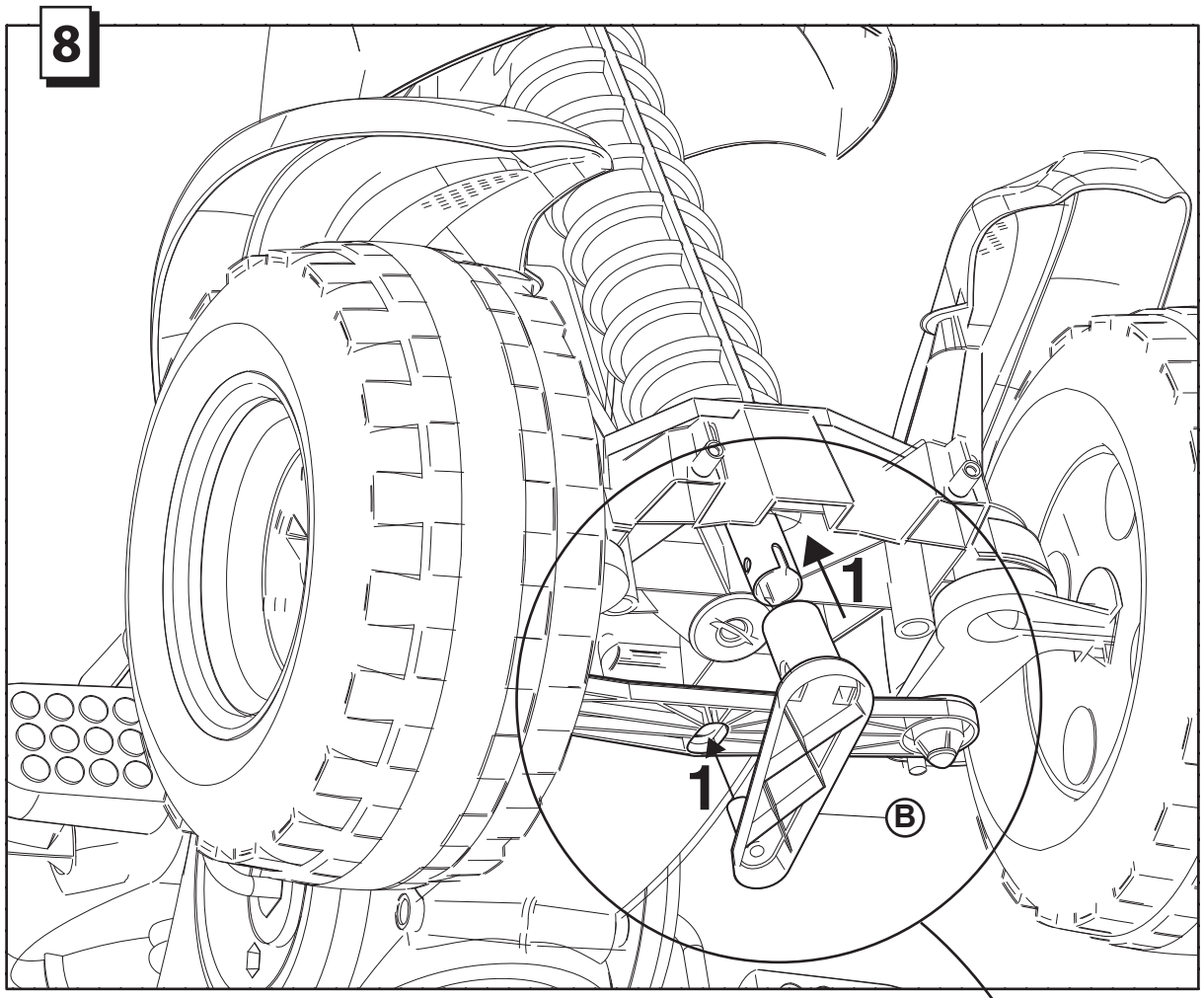
8
1
1
B

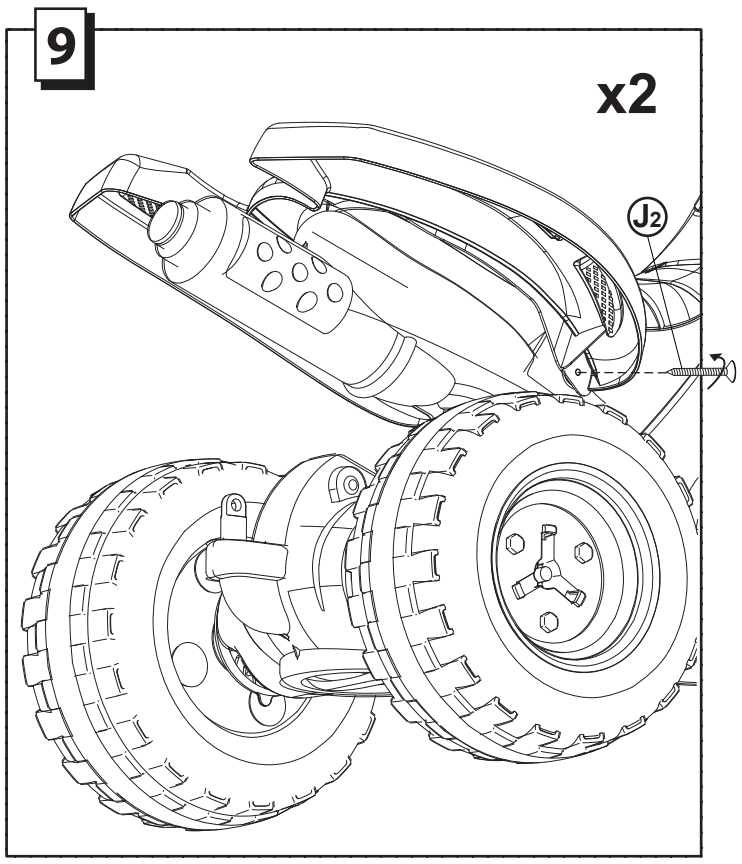
9
x2
J2

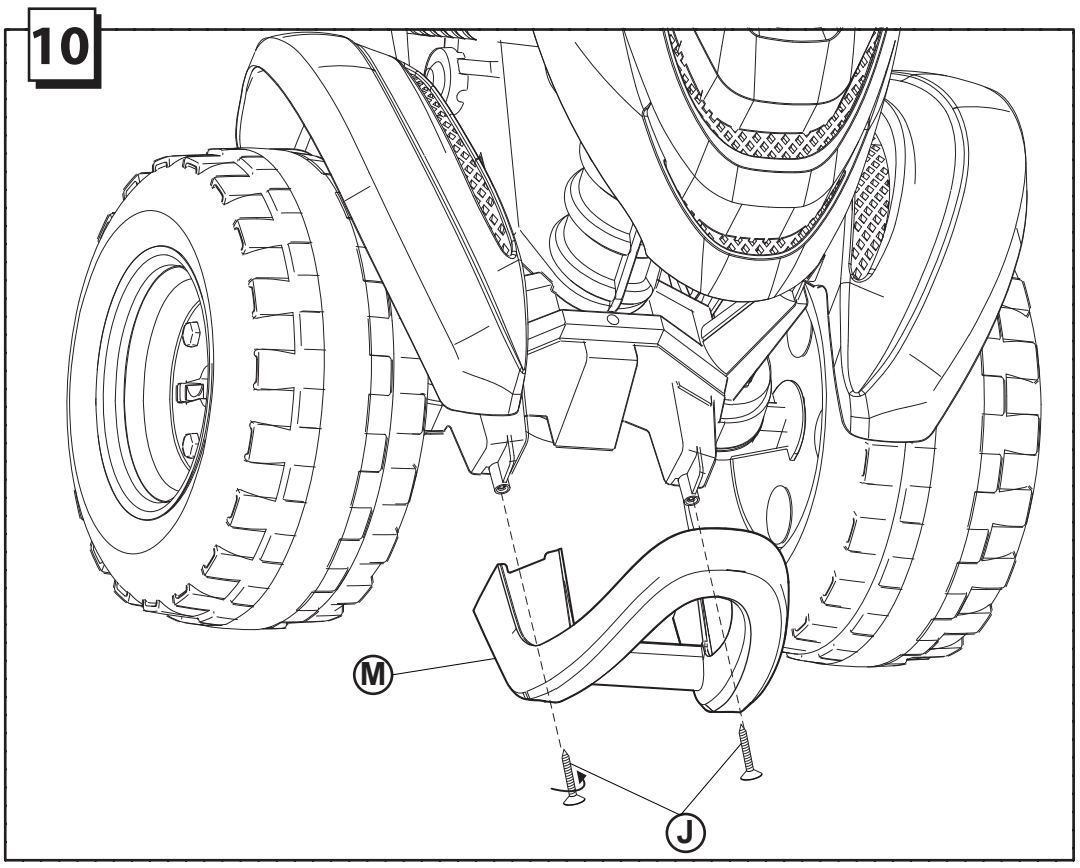
10
M
J

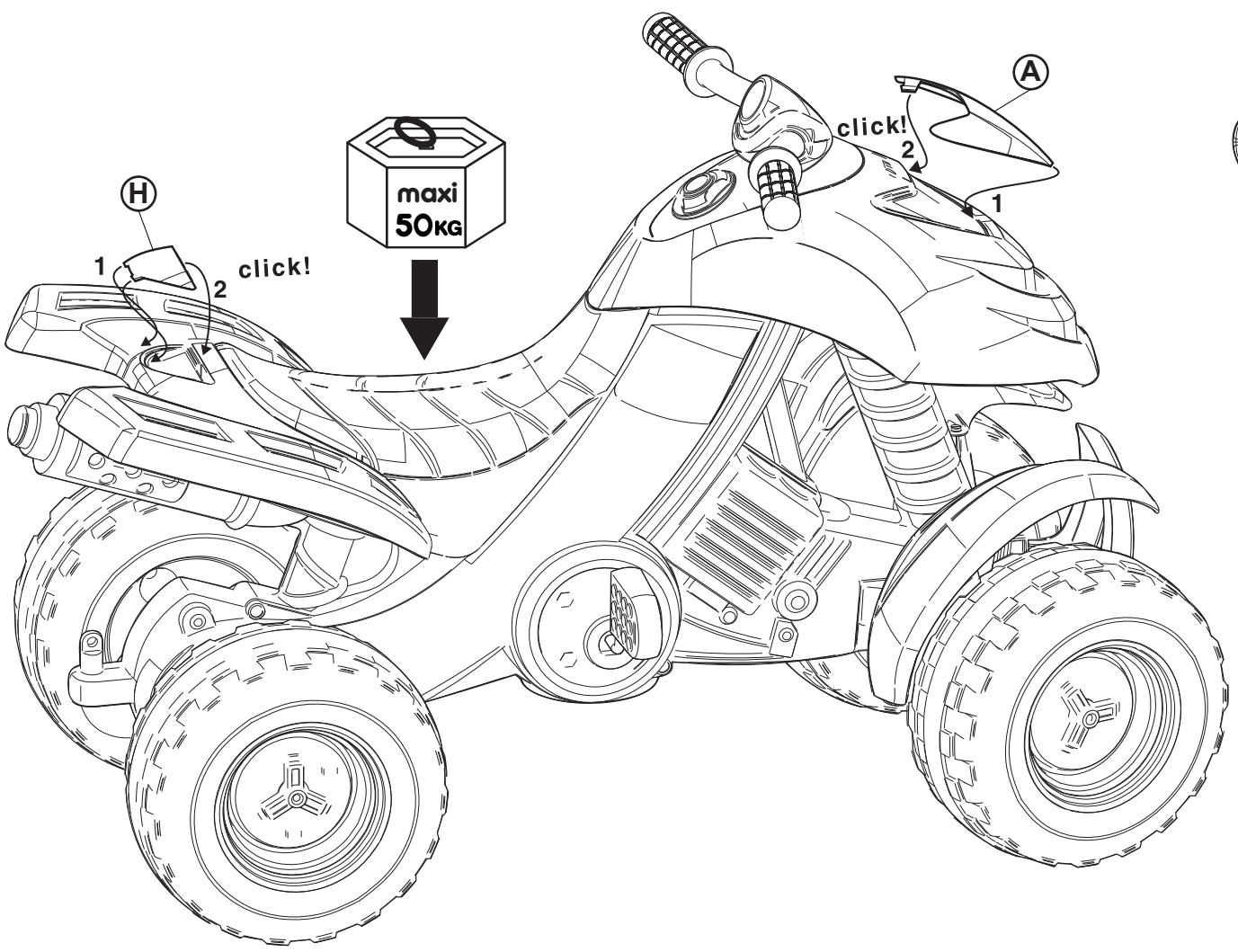
H
1
2
click!
maxi
50KG
A
click!
2
1

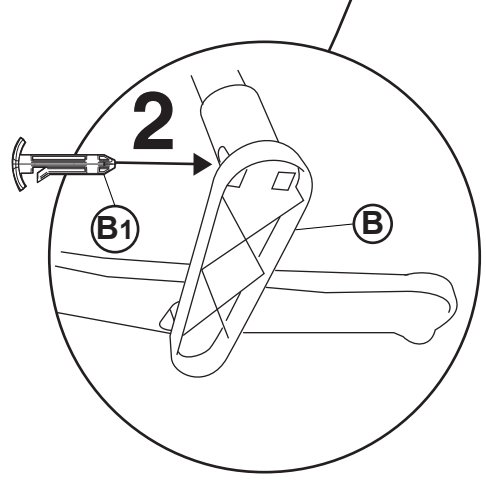
2
B1
B