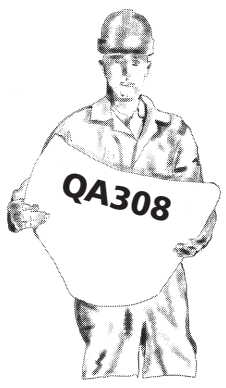
QA308

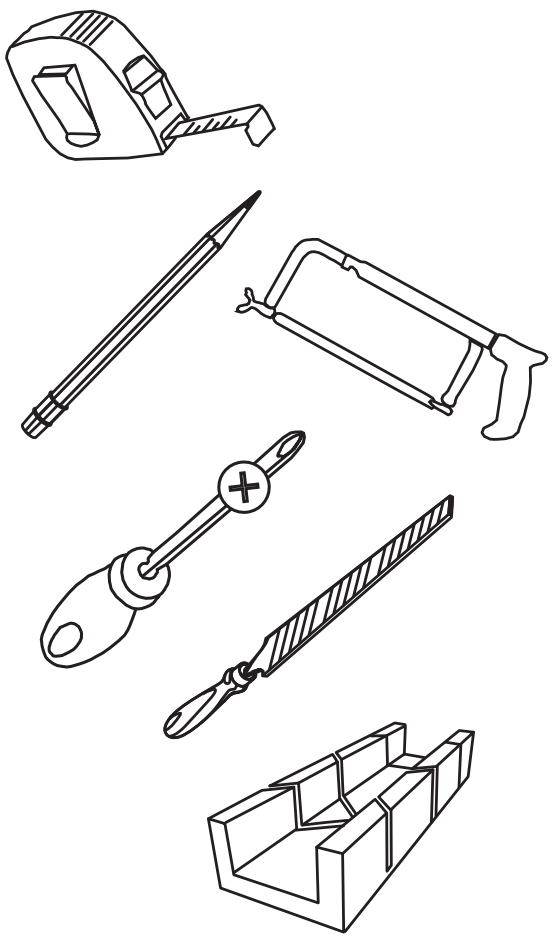

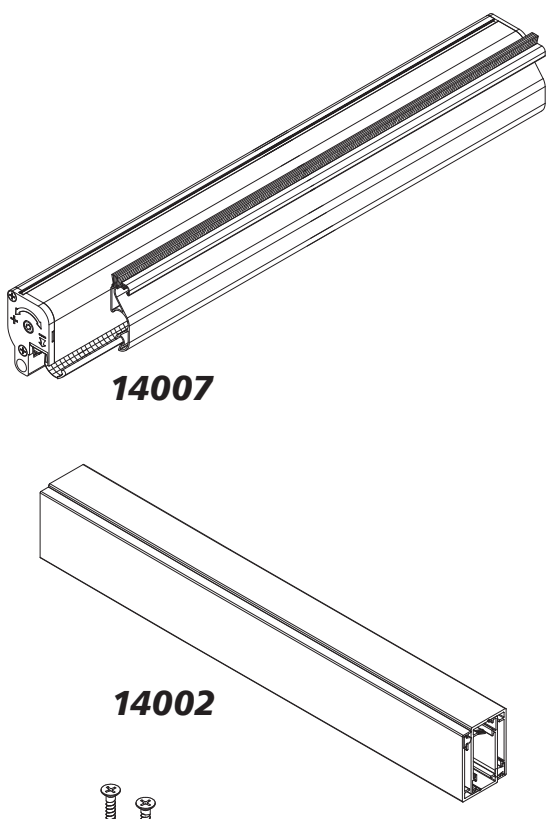
14007
14002

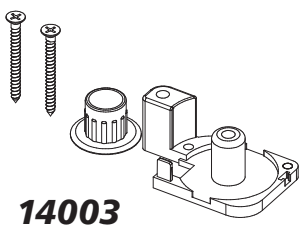
14003

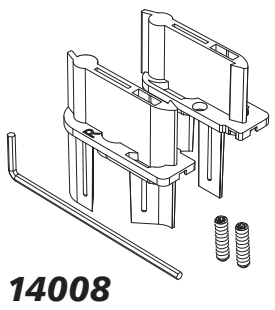
14008

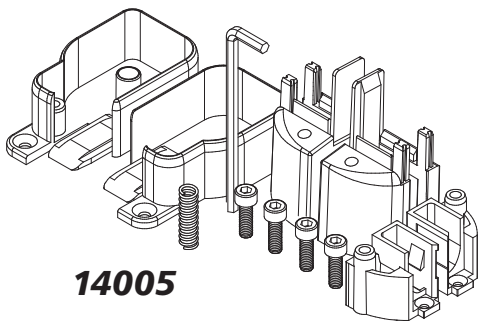
14005

M1

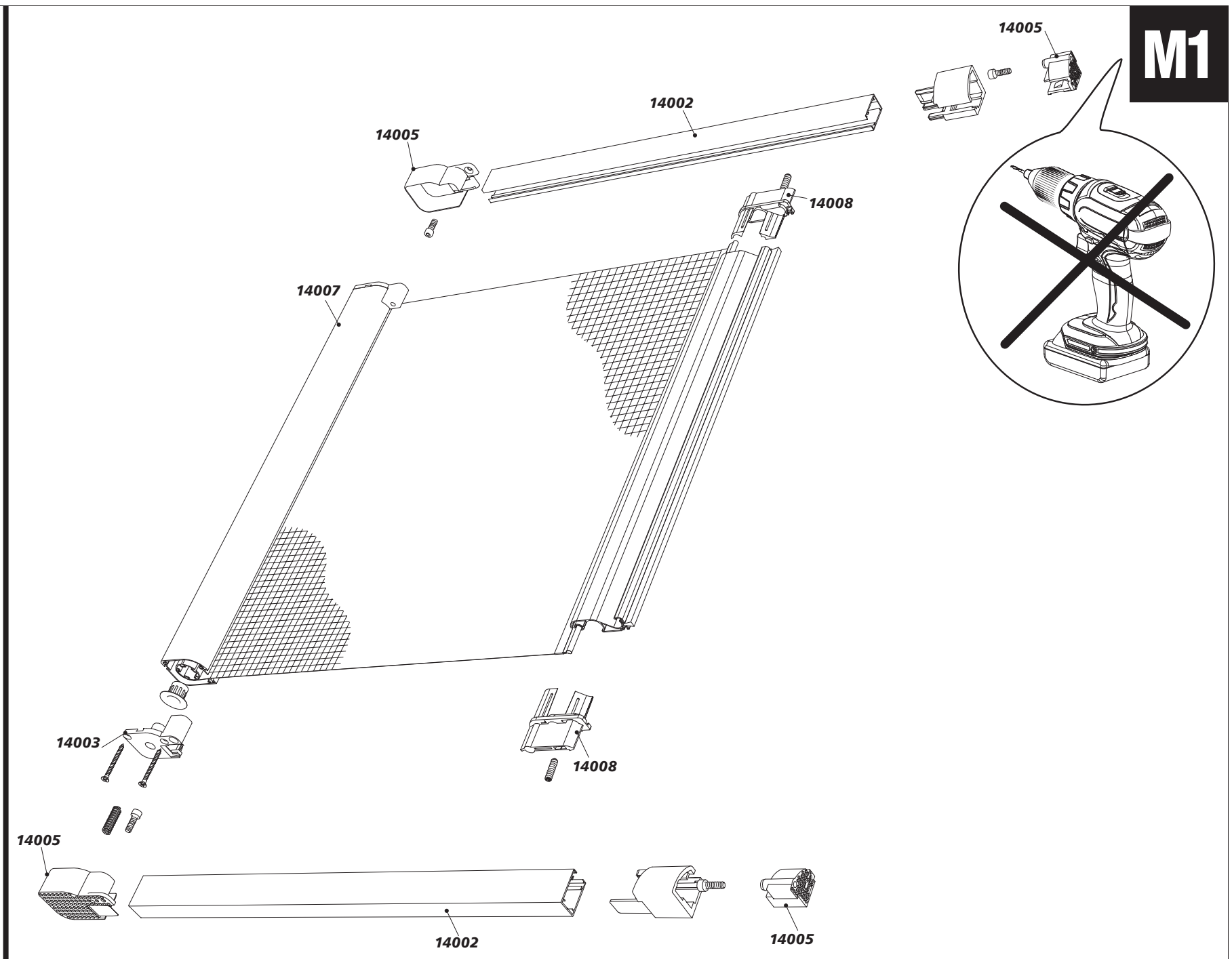
14005
14002
14008
14007
14003
14008
14005
14002
14005

1

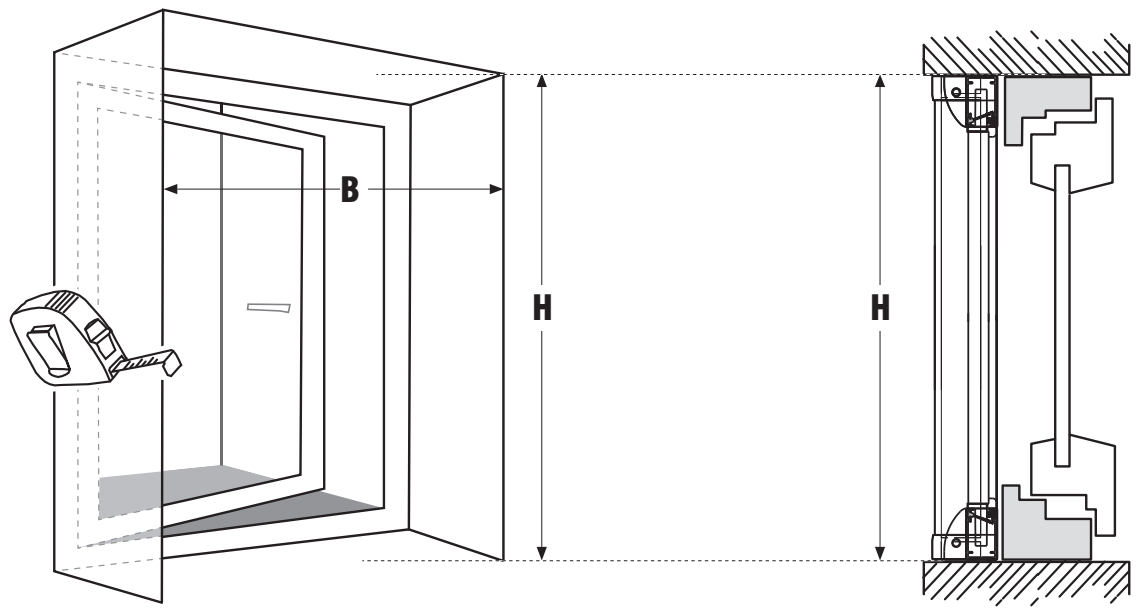
B
H
H

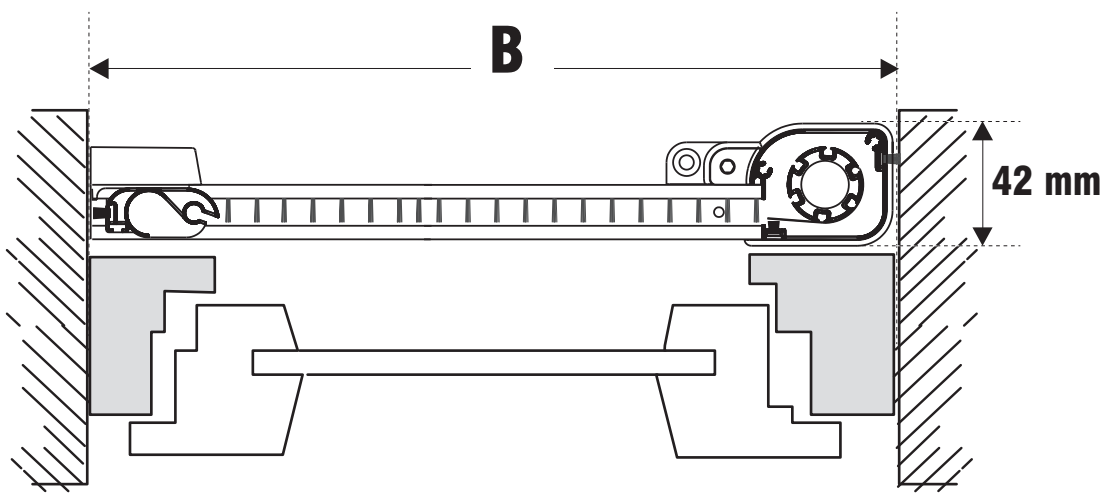
B
42 mm

2

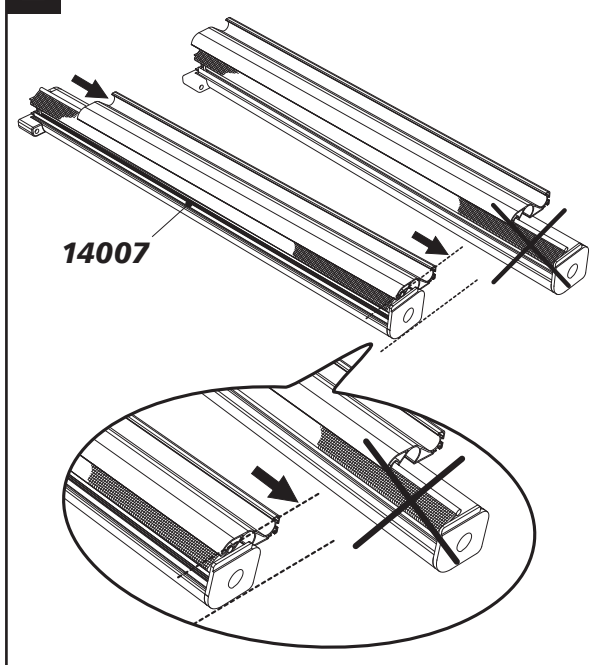
14007

3

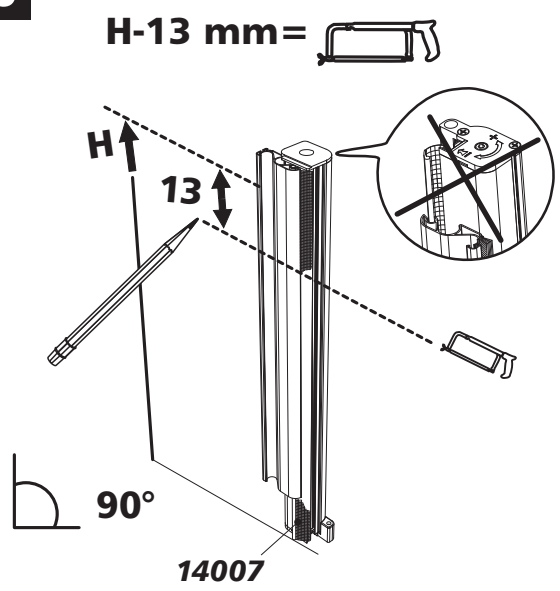
H-13 mm=
H
13
90°
14007

4

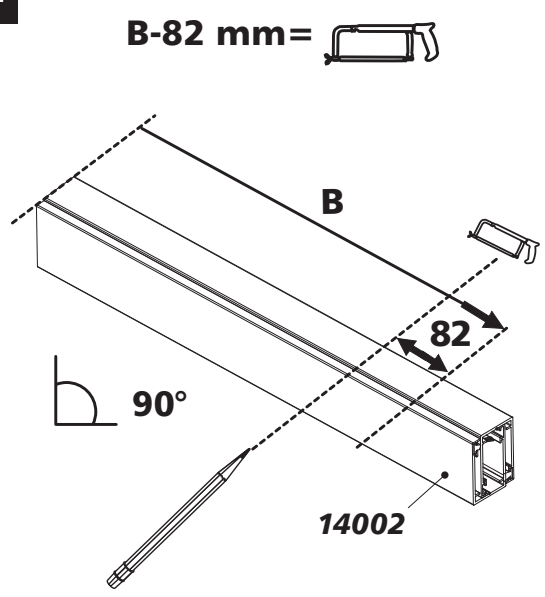
B-82 mm=
B
82
90°
14002

5

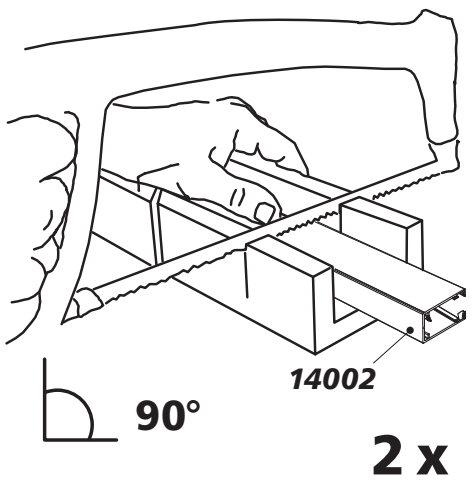
14002
90°
2 x

6

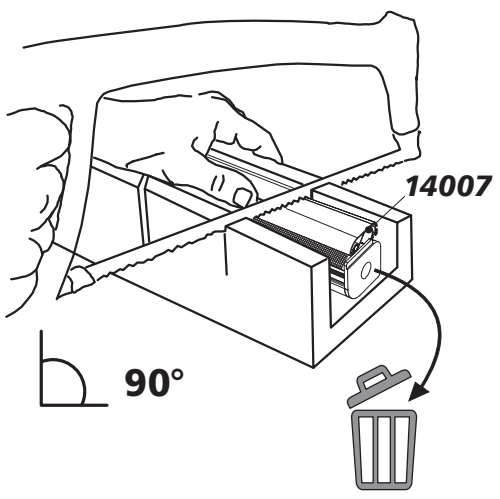
14007
90°

7

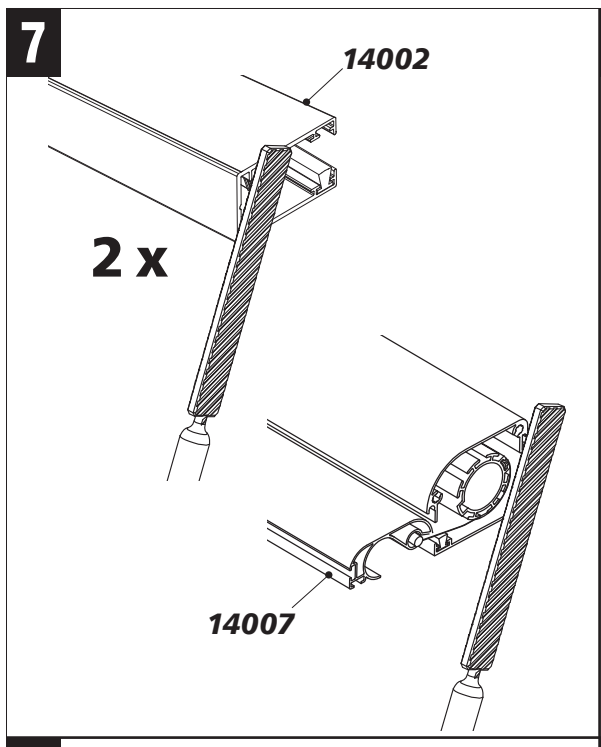

8

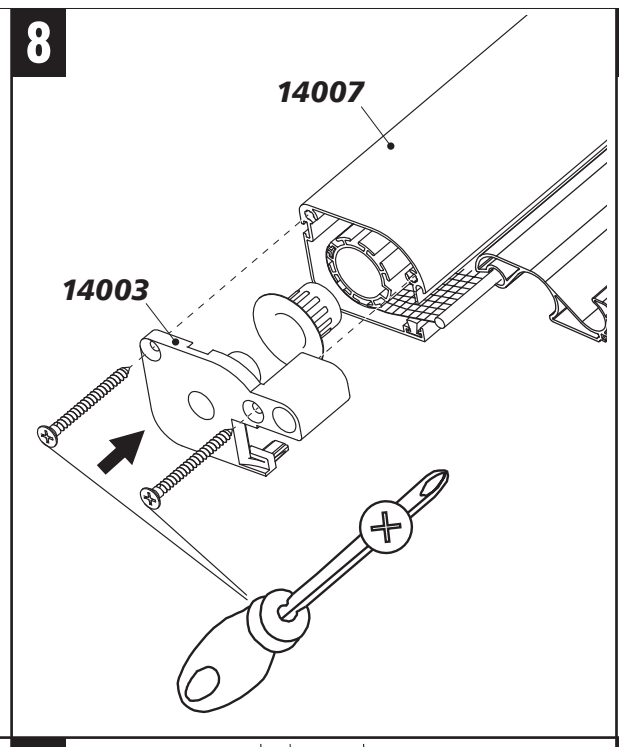

9

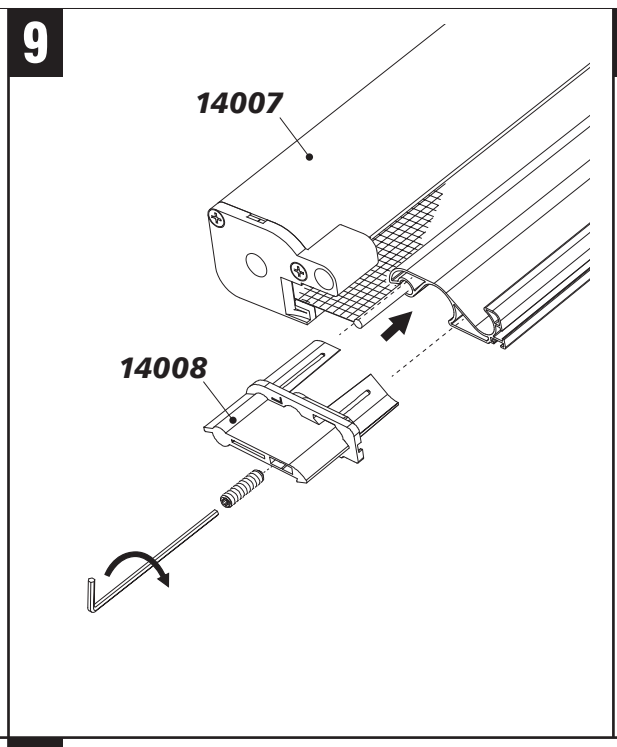

10

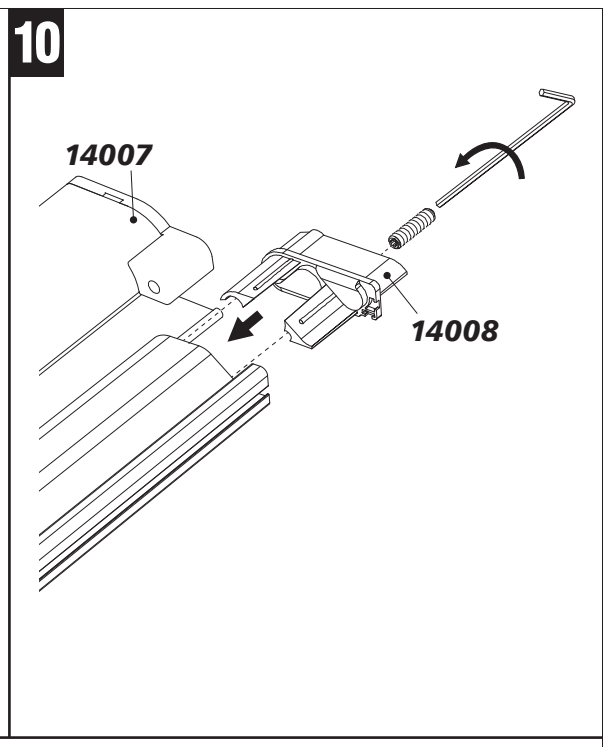

11

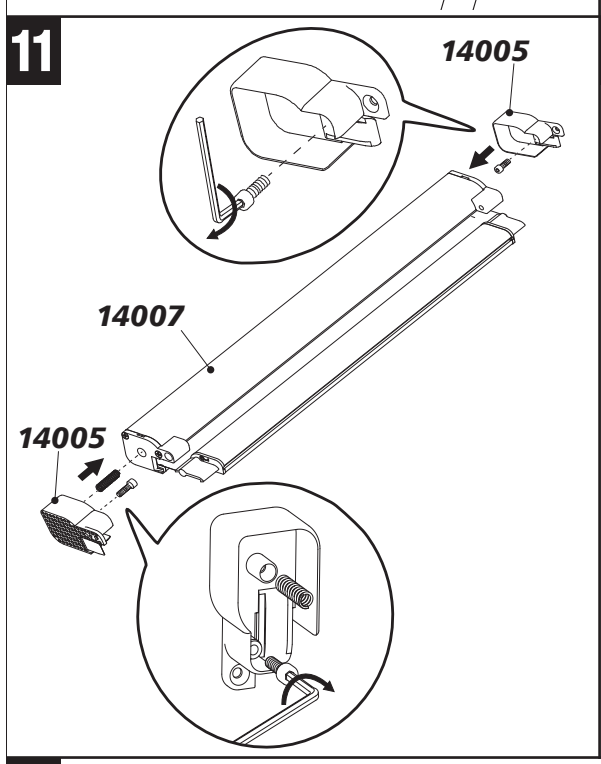

12

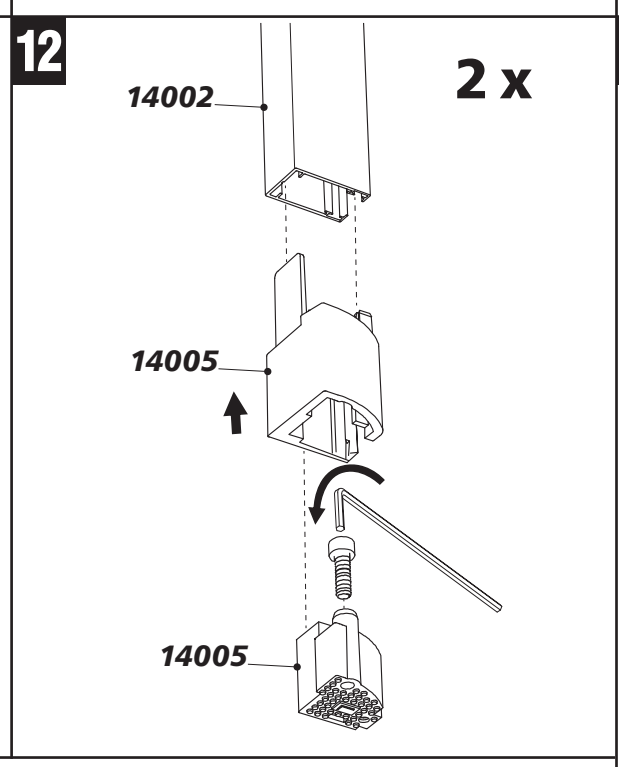

13

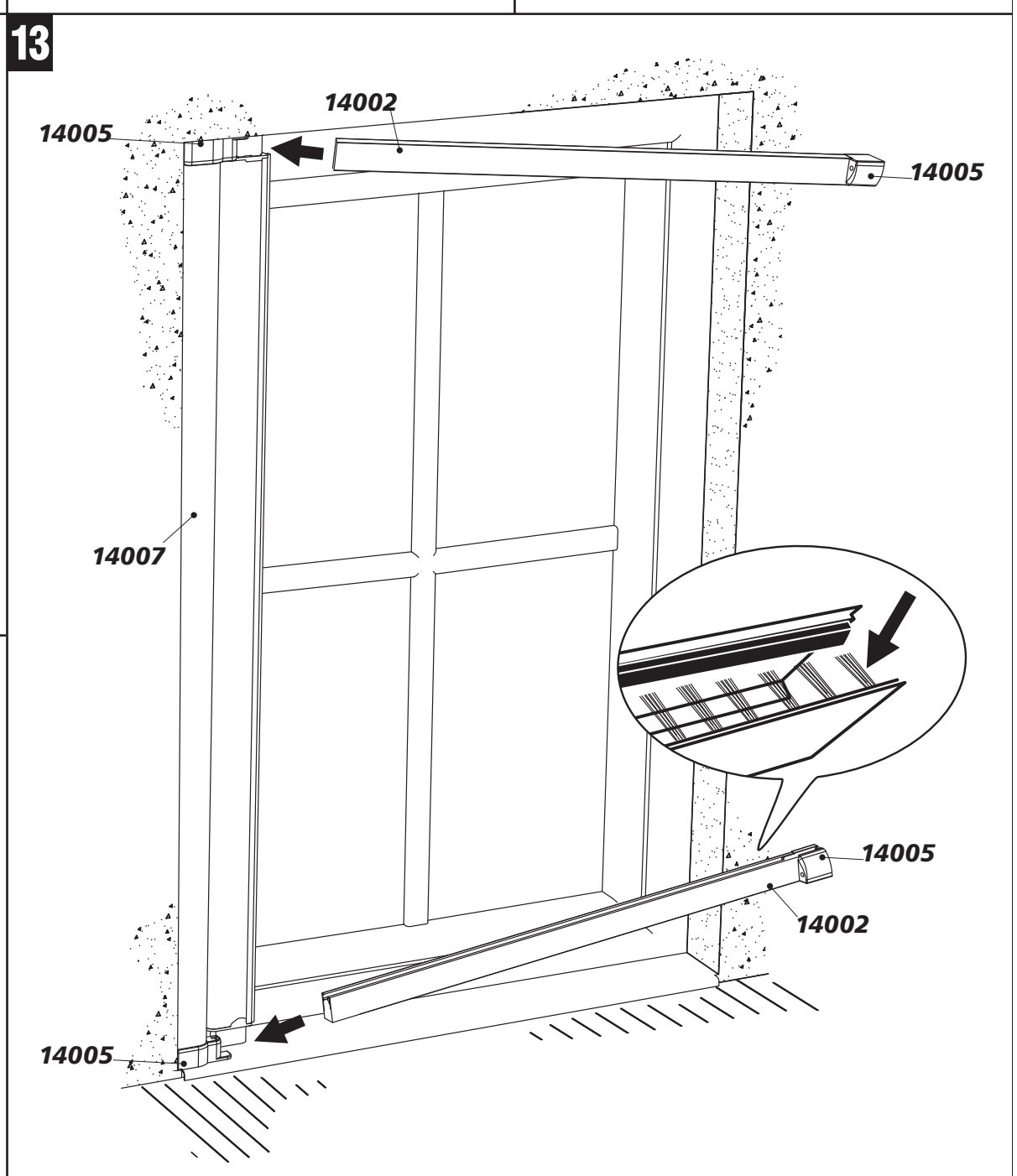

14

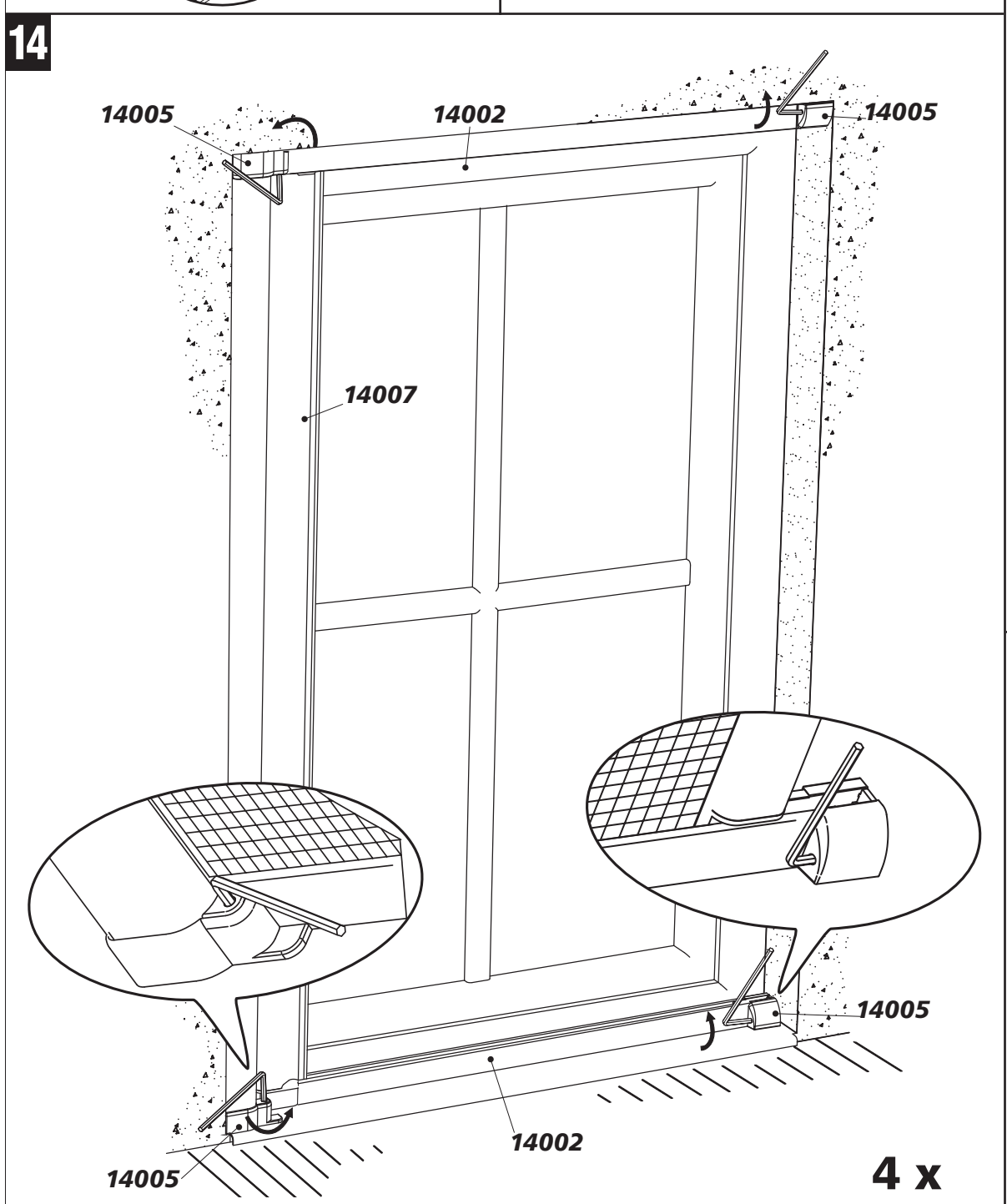
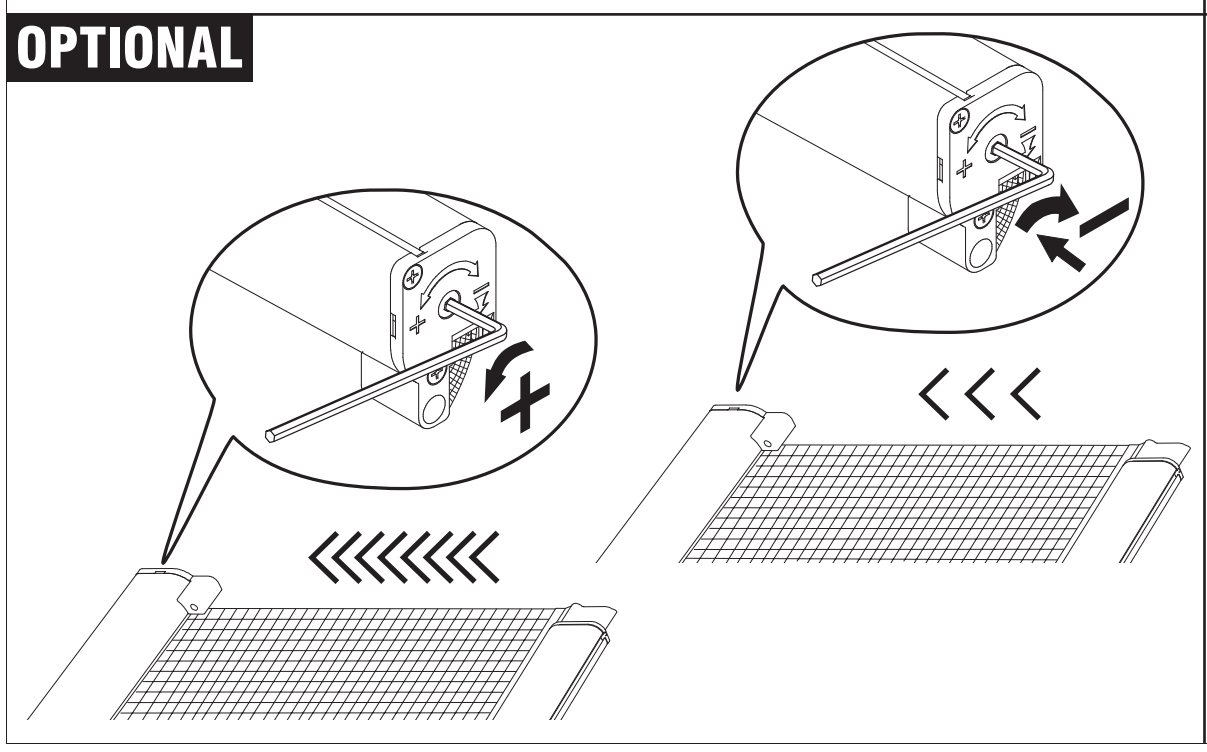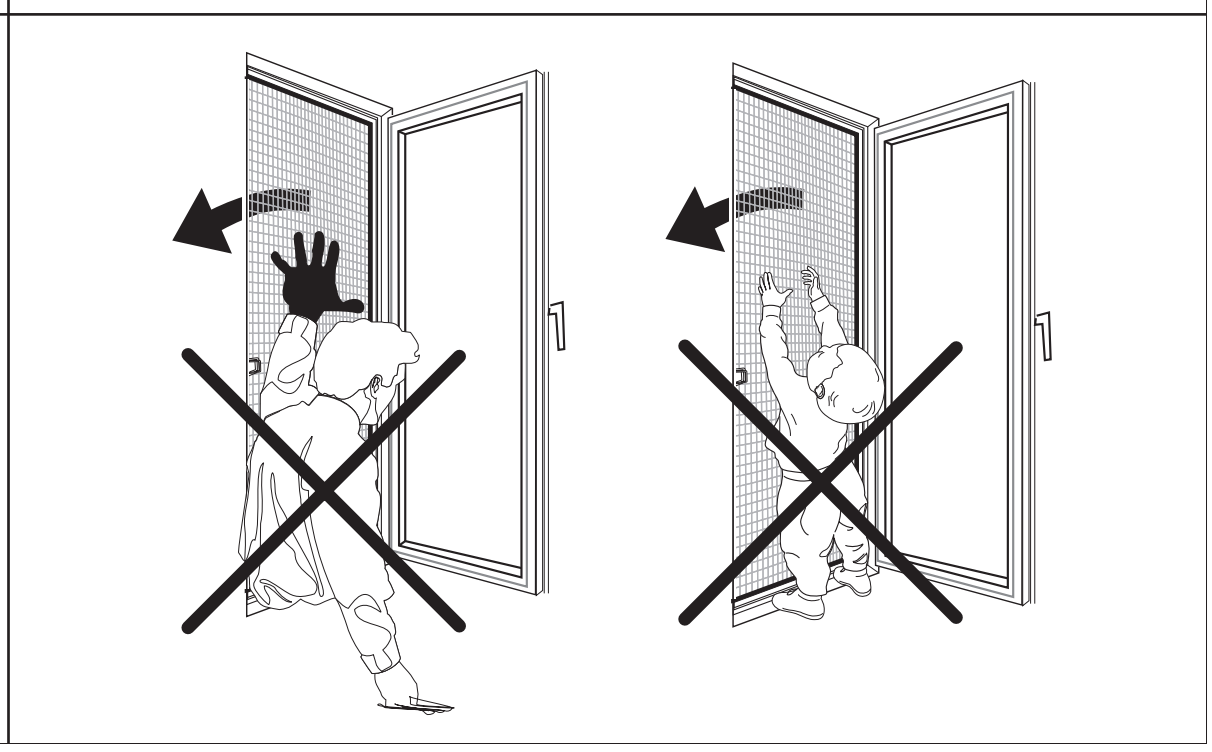
OPTIONAL