ASSEMBLY INSTRUCTON

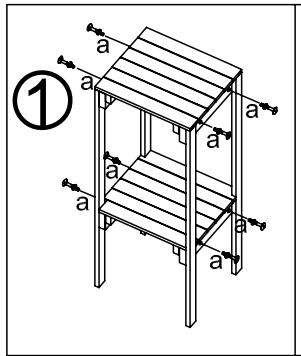

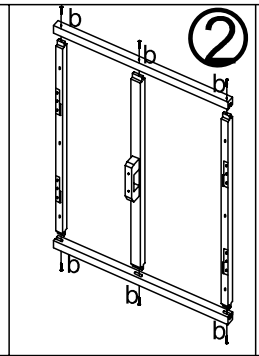

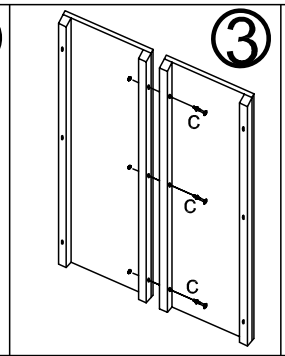

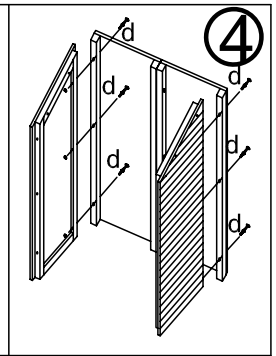

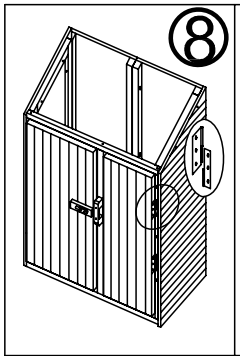

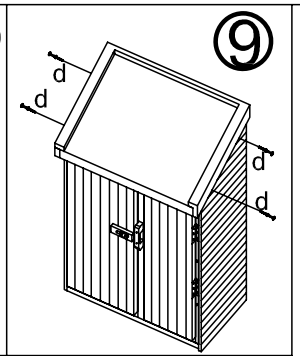

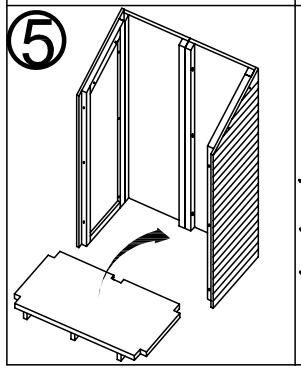

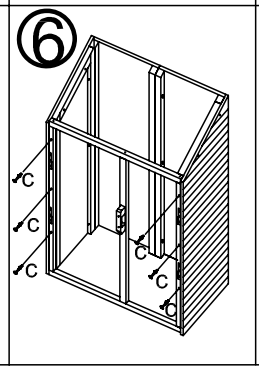

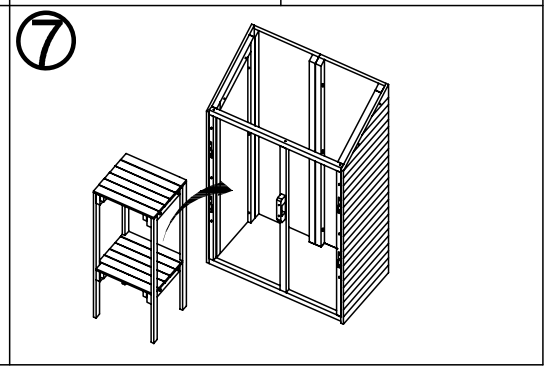

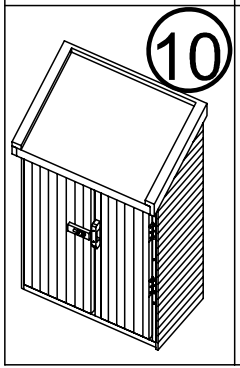

a ..8PCS

b ..6PCS

c ..9PCS

d ..10PCS