NOMENCLATURE

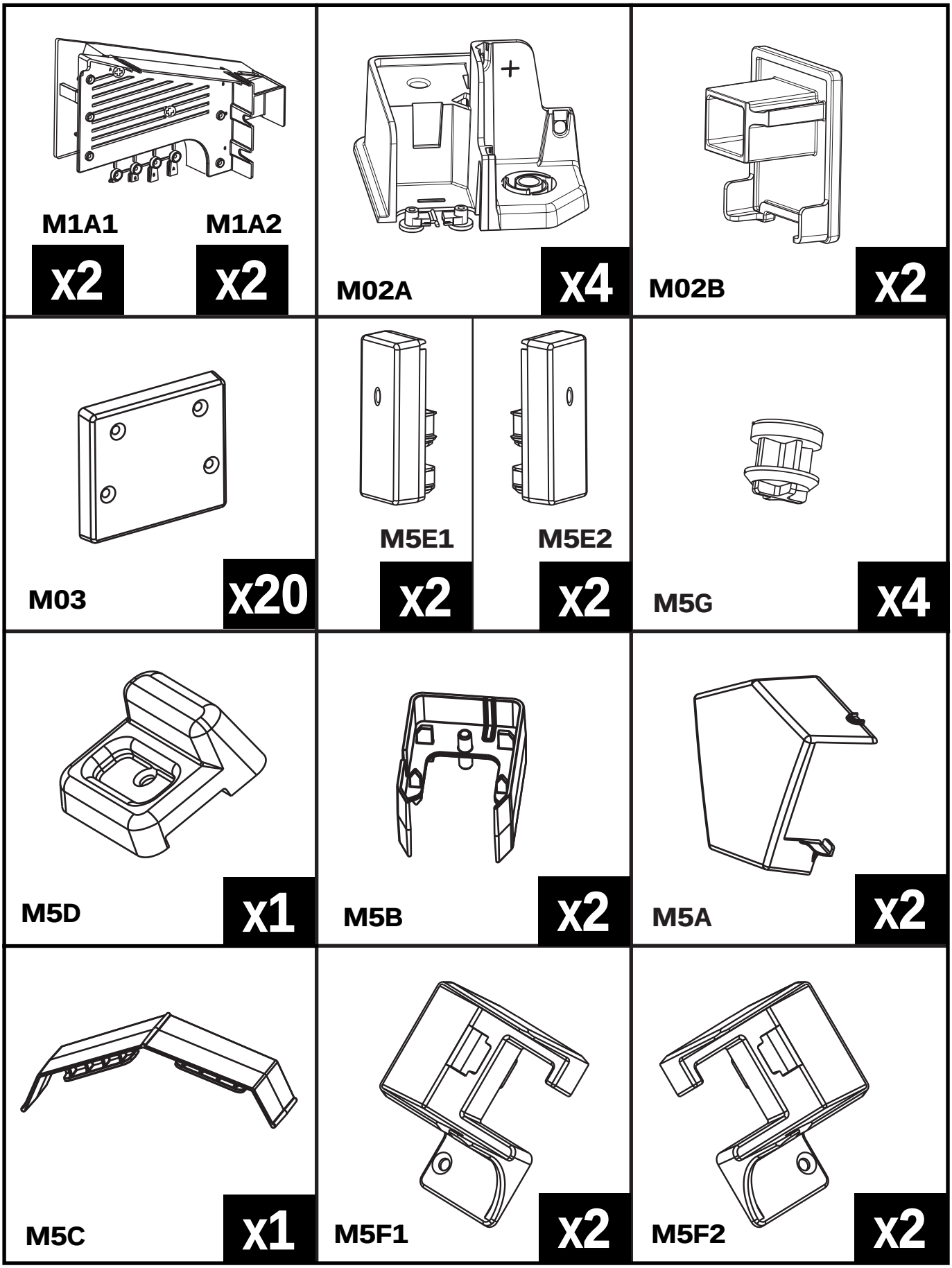

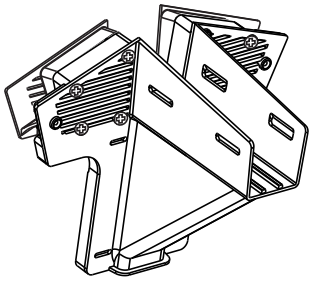

M06A **x2**

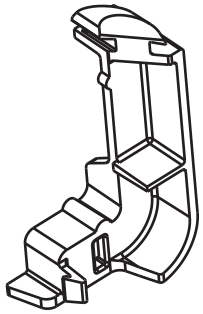

M8A **x24**

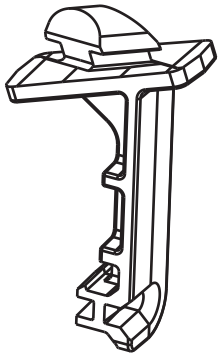

M8B **x8**

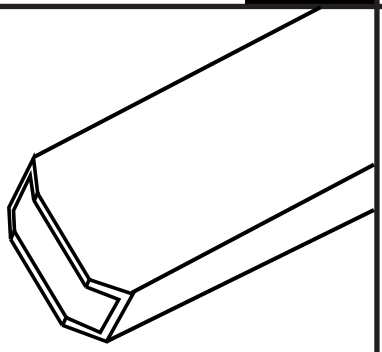

F10A L 1765 mm **x22**

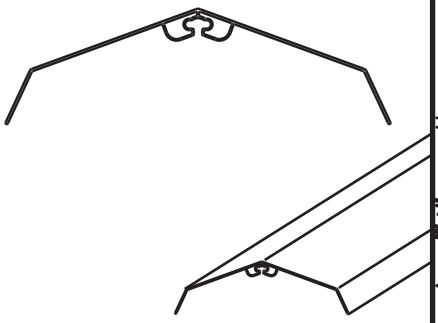

F8B L 1445 mm **x2**

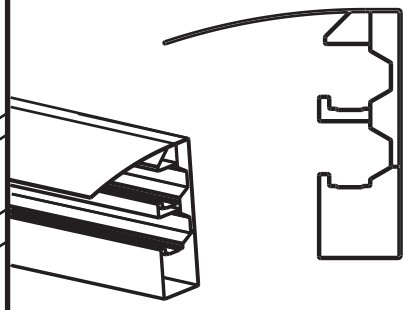

F71D L 1610 mm **x4**

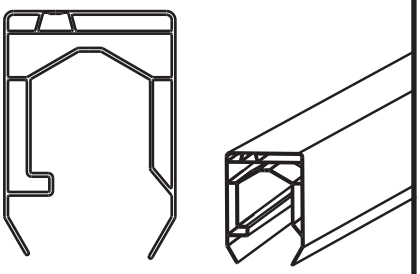

F72B L 1425 mm **x4**

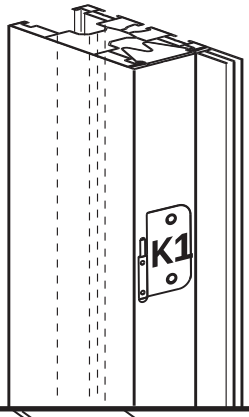

EM1 **x1**

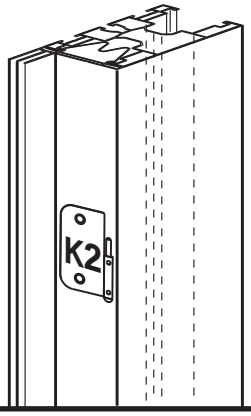

EM2 **x1**

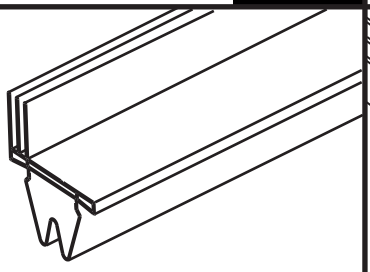

F6D2 L 600 mm **x2**

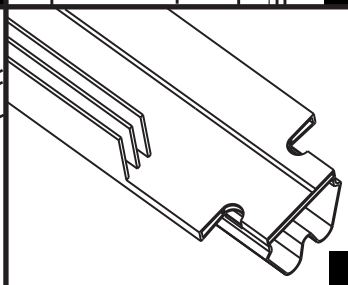

F6A2 L 1482 mm **x1**

F6E2 L 792mm **x2**

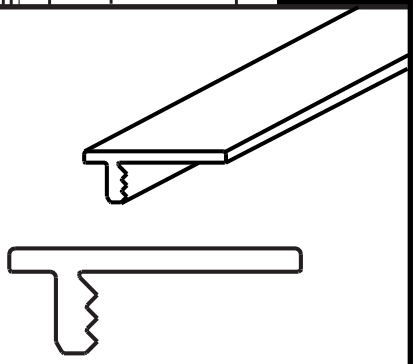

FP113 L 1800 mm **x1**

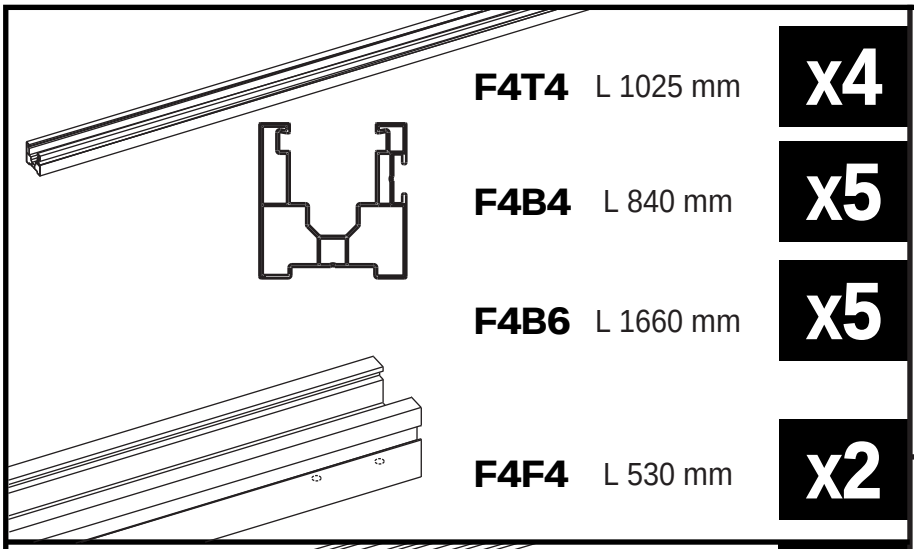
F4T4 L 1025 mm x4
F4B4 L 840 mm x5
F4B6 L 1660 mm x5
F4F4 L 530 mm x2

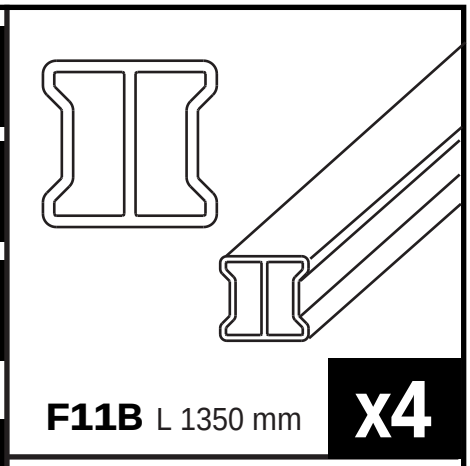
F11B L 1350 mm x4

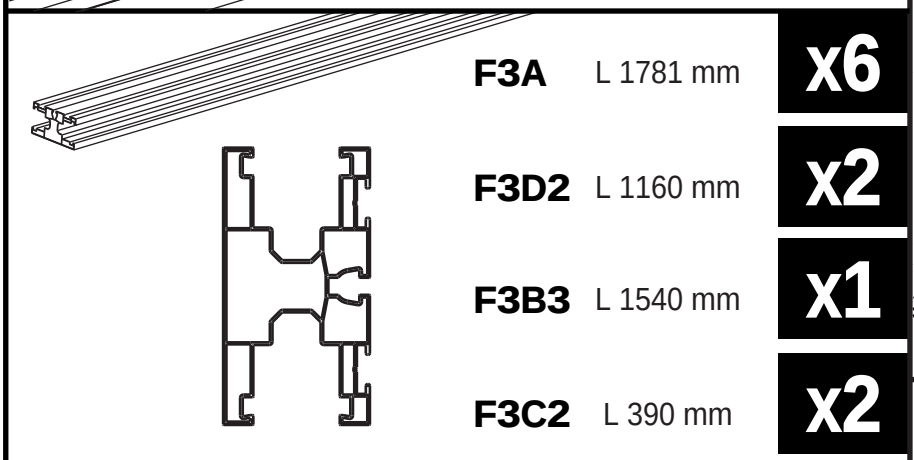
F3A L 1781 mm x6
F3D2 L 1160 mm x2
F3B3 L 1540 mm x1
F3C2 L 390 mm x2

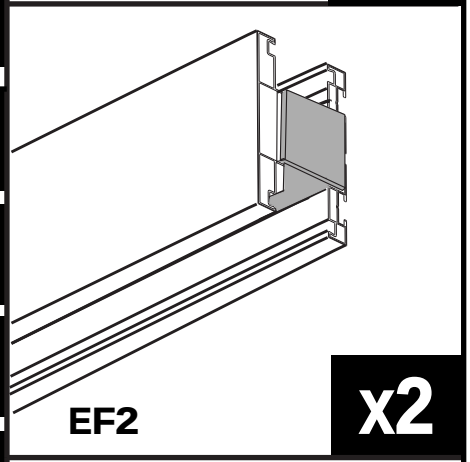
EF2 x2

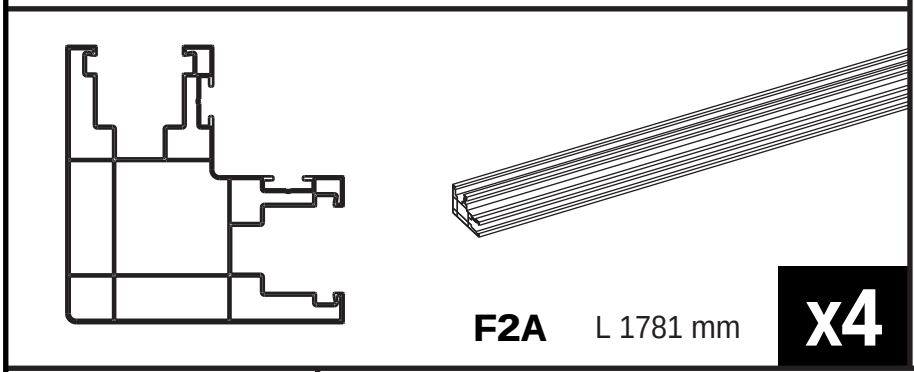
F2A L 1781 mm x4

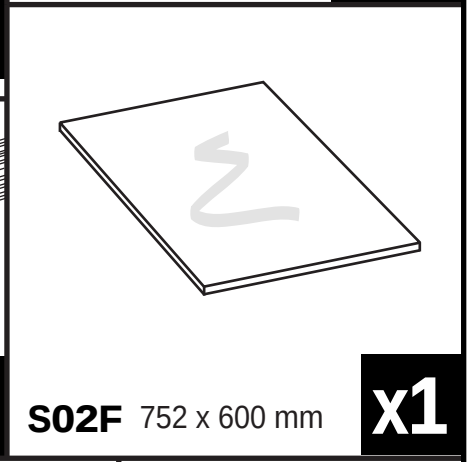
S02F 752 x 600 mm x1

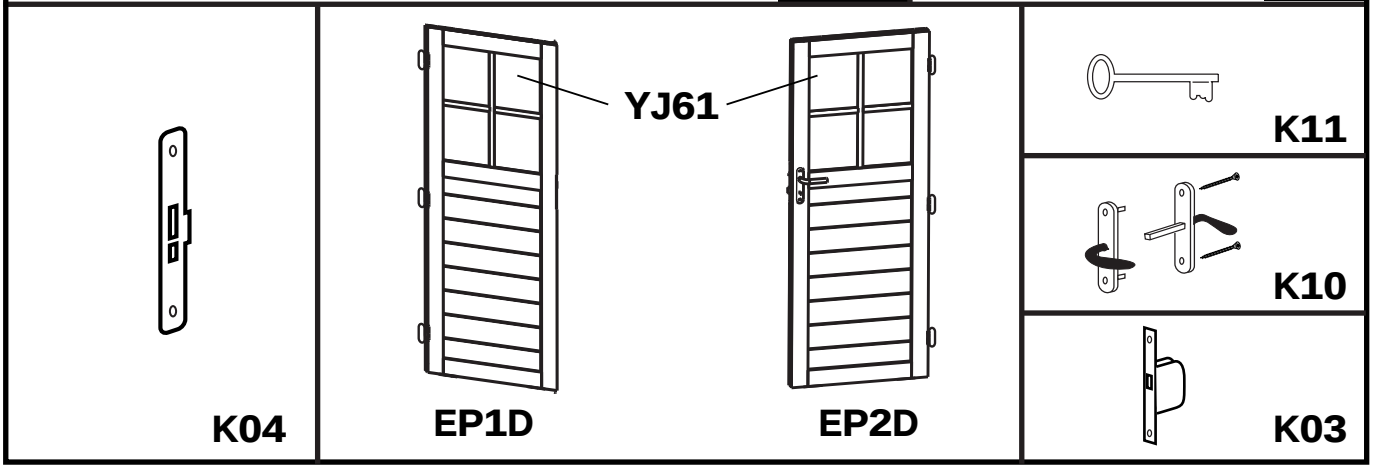
K04
YJ61
EP1D
EP2D
K11
K10
K03

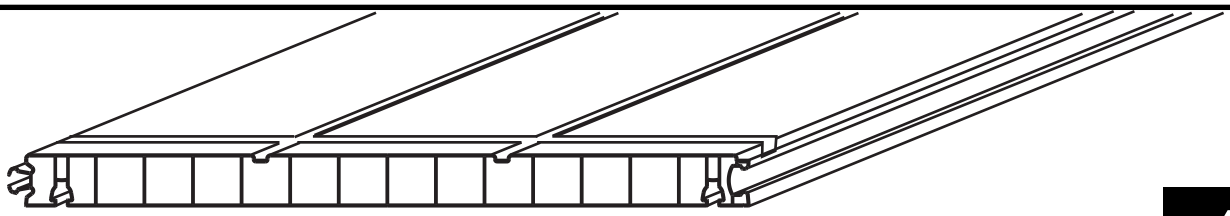

F1H1 L 810 mm **x42**

F1H2 L 466 mm **x10**

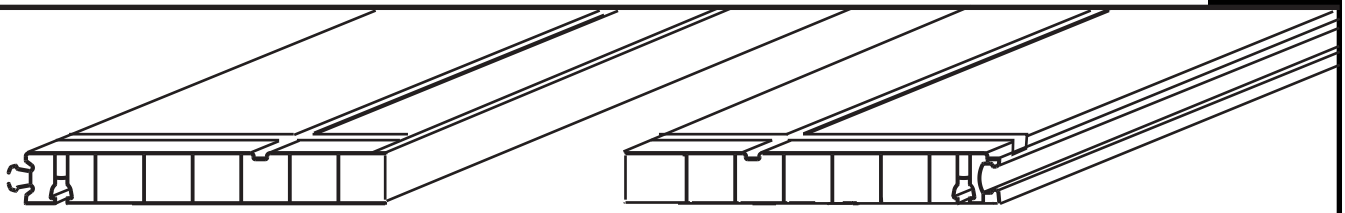

F1D1 L 810 mm **x1**

F1D2 L 810 mm **x1**

F1T4 L 1650 mm **x16**

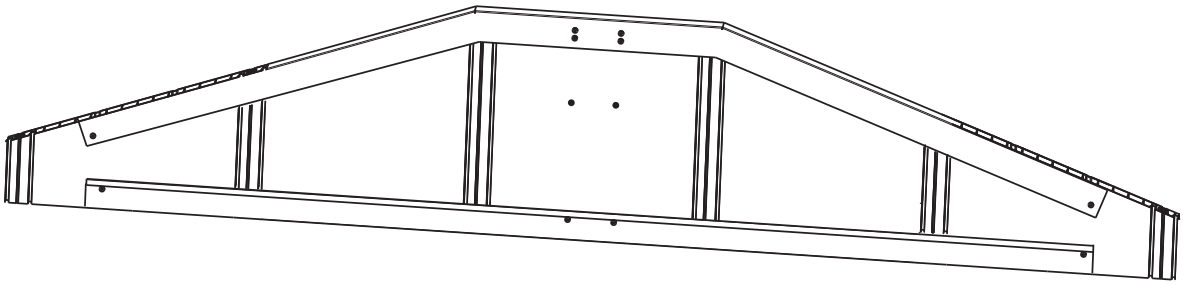

ET4 **x2**

T4-2 **x2**

T4-1 **x2**

SHA

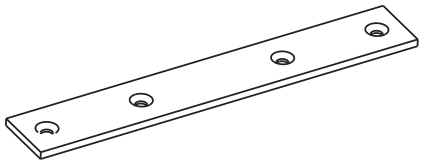

A02 **x5**

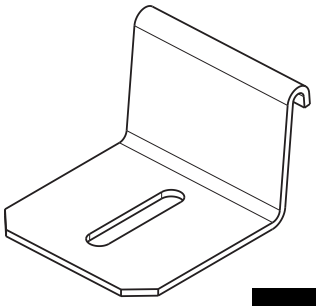

A03 **x20**

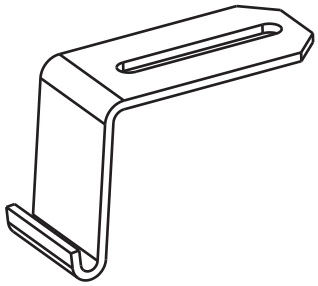

A04 **x8**

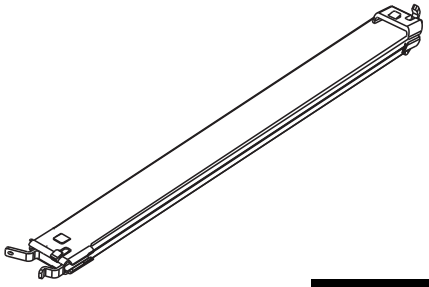

A12D **x6**

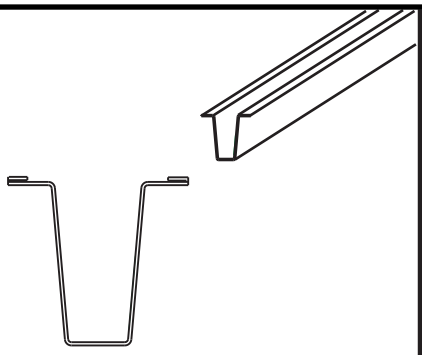

A15C L 1100 mm **x2**

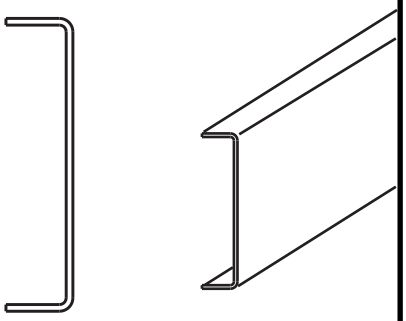

A14 L 1050 mm **x4**

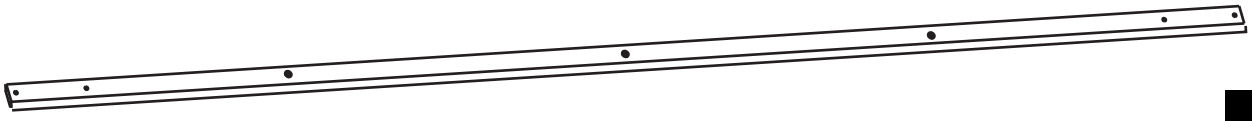

A01B **x1**

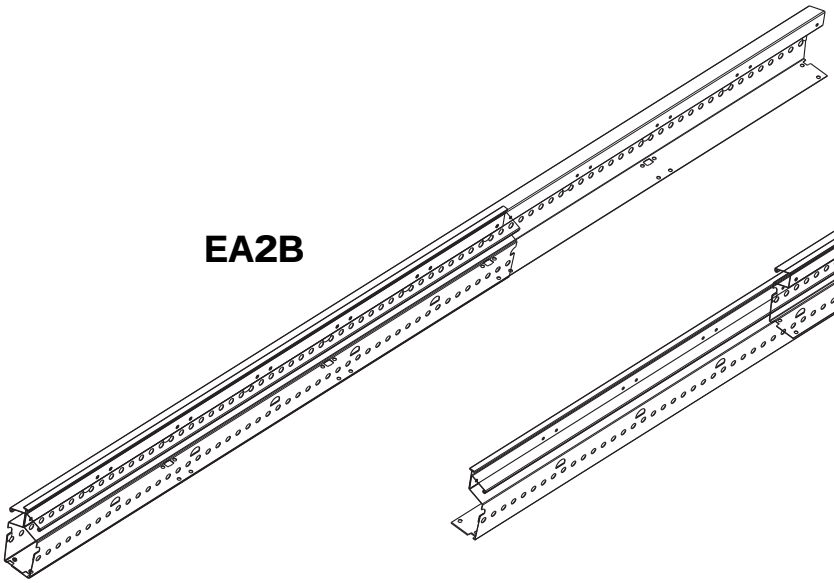

EA2B

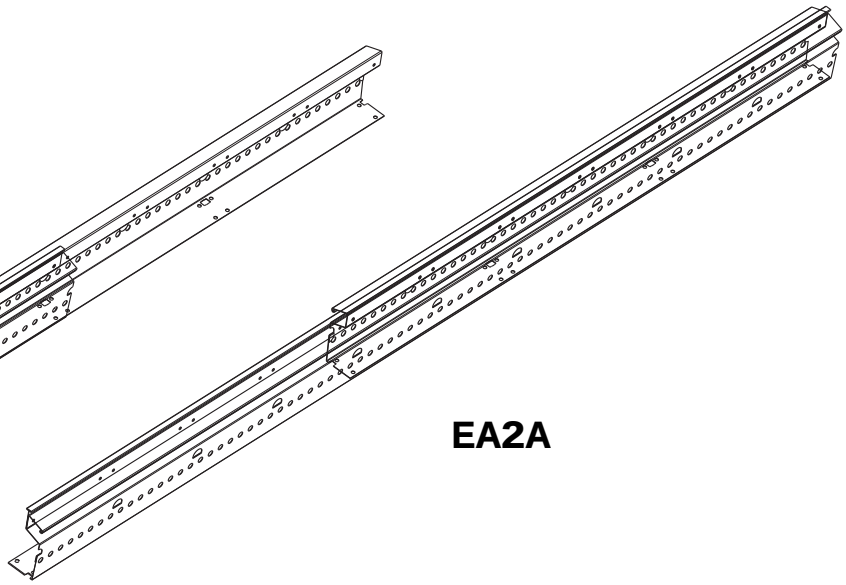

EA2A

1+1

VISSERIE

SH01

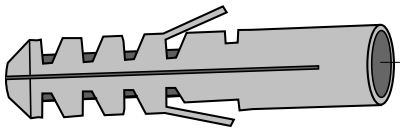

V04
Ø10mm

x4

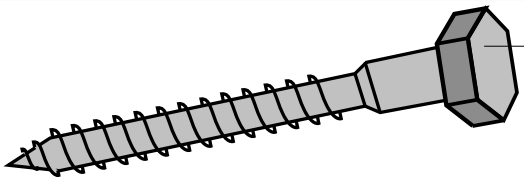

V08
Ø8 x 50mm

x4

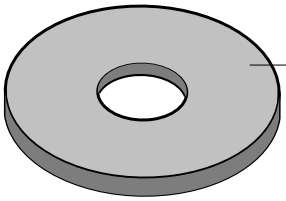

V23
Ø36mm

x4

SH02

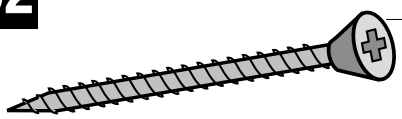

V11
Ø4 x 45mm

x130

SH03

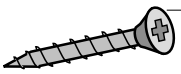

V13
Ø4,2 x 25mm

x73

SH04

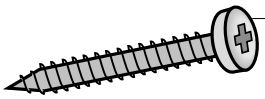

V01
Ø4 x 32mm

x10

SH05

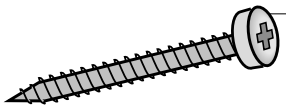

V16
Ø4,2 x 35mm

x35

SH06

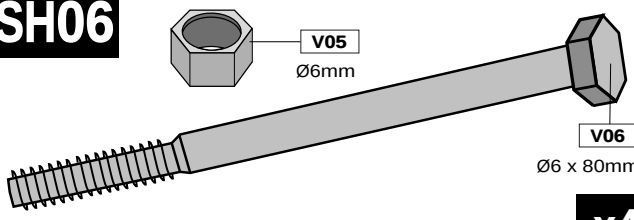

V05
Ø6mm

V06
Ø6 x 80mm

x4

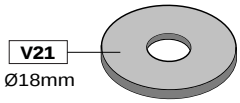

V21
Ø18mm

x8

SH07

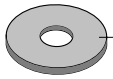

V22
Ø14mm

x44

SH08

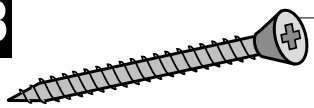

V20
Ø4 x 40mm

x13

SH09

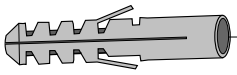

V03
Ø6mm

x30

SH10

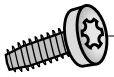

V07
Ø4 x 8mm

x6

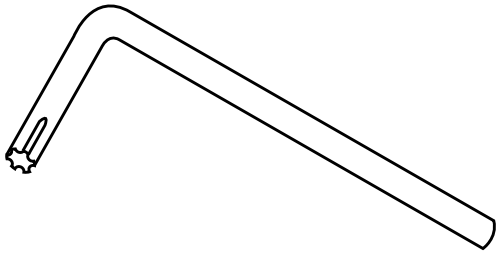

x1

PBYN2

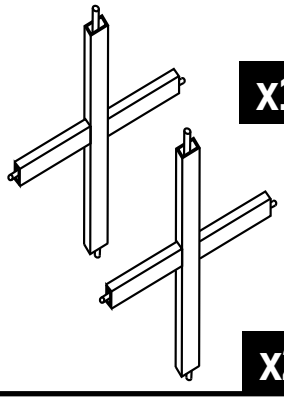

x1

x2

YP02

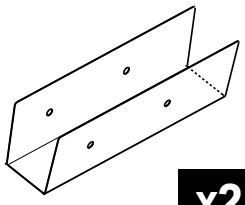

x2

PBYN4

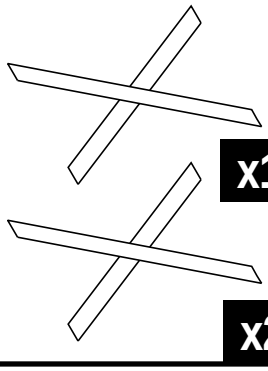

x1

x2

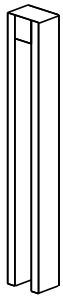

YM09

x2