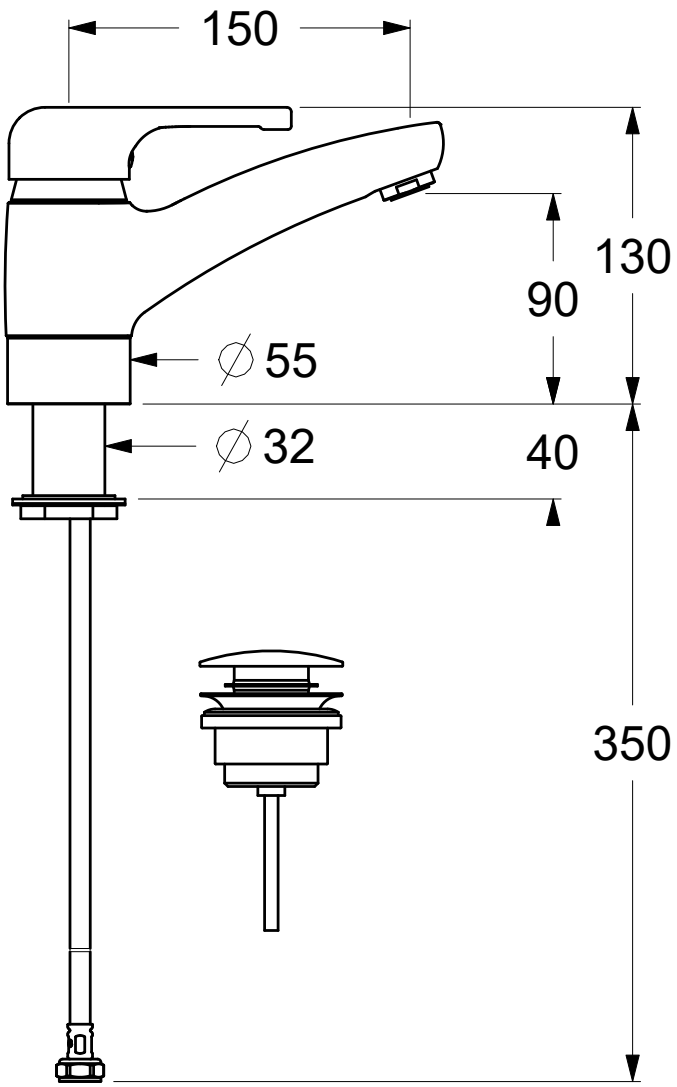

09-01-2023