SRP-2309-30-TW-CC

30W DALI DT8 DIMMABLE LED DRIVER

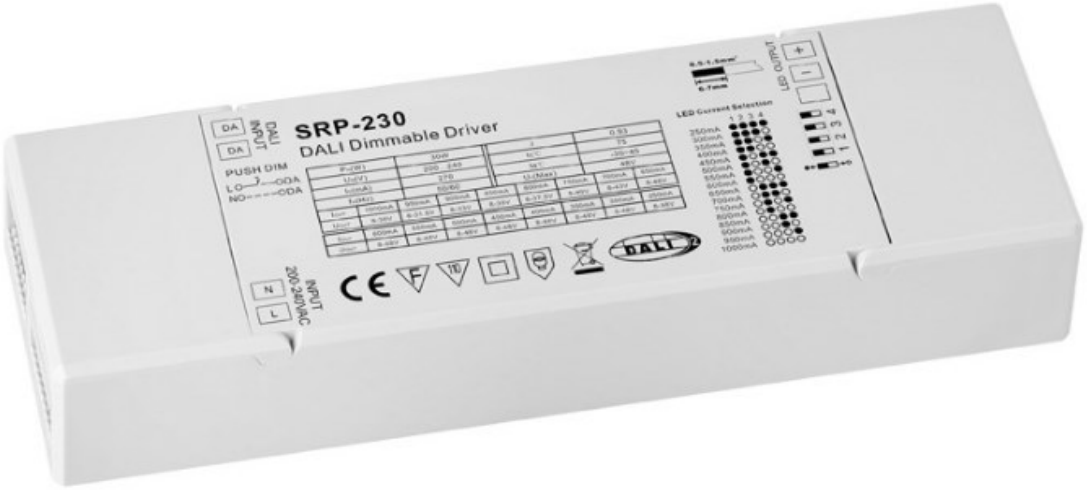

Product Features

- DALI DT8 Dimmable LED driver for tunable white
- Max. output power 30W
- 2 channels 250-1000mA constant current output
- Dips to set the operation current
- Class 2 power supply, full isolated plastic case
- High power factor and efficiency
- Built-in DALI interface, DALI DT8 device
- Complies to IEC 62386-209:2011
- DALI DT8 device to control Warm White and Cool White output via a single DALI address
- Color temperature adjustment according to DALI specifications of Device Type 8, Color Type Tc.
- Compatible with universal DALI masters that support DT8 commands
- Error report function
- IP20 rating, suitable for indoor LED lighting applications
- 5 year warranty

Technical data

INPUT	**Voltage Range**	200-240V AC							
	Frequency Range	50/60Hz							
	Power Factor (typ.)	> 0.9							
	Efficiency typ.	87% @ 230VAC							
	AC Current (typ)	0.16A @ 230VAC							
	Inrush Current (typ)	COLD START Max. 2A at 230VAC							
	Leakage Current	< 0.5mA/230VAC							
	LED Channel	2							
OUTPUT	**Selectable Current**	**250mA**	**300mA**	**350mA**	**400mA**	**450mA**	**500mA**	**550mA**	**600mA**
	DC Voltage Range	8-48V	8-48V	8-48V	8-48V	8-48V	8-48V	8-48V	8-48V
	Selectable Current	**650mA**	**700mA**	**750mA**	**800mA**	**850mA**	**900mA**	**950mA**	**1000mA**
	DC Voltage Range	8-46V	8-43V	8-40V	8-37V	8-35V	8-33V	8-31V	8-30V
	Current Tolerance	+/- 3%							
	DC Voltage Range	8-48VDC							
	Rated Power	max. 30W							
PROTECTION	**Short Circuit**	Yes, recovers automatically after fault condition is removed							
	Over Temperature	Yes, recovers automatically after fault condition is removed							
	Over Voltage	Yes, recovers automatically after fault condition is removed							
CONTROL	**Dimming Interface**	DALI DT8							
	Dimming Range	0% - 100%							
	Dimming Methode	PWM, 1.5kHz							
ENVIRONMENT	**Working Tempetrature**	-20°C - + 45°C							
	Max. Case Temperature	85°C							
	Working Humidity	10%-95% RH non-condensing							
	Storage Temperature	-40°C - +80°C							
	Storage Humidity	10% - 95% RH							
	IP Rating	IP20 (suitable for indoor LED lighting applications)							
Safety & EMC	**Safety Standards**	EN61347-1, EN61347-2-13 approved							
	DALI Standards	Comply with IEC 62386-209:2011							
	Withstand Voltage	I/P-O/P: 3.75KVAC							
	Isolation Resistance	I/P-O/P: 100M Ohms / 500VDC / 25°C / 70% RH							
	EMC Emission	EN55015, EN61000-3-2, EN61000-3-3							
	EMC Immunity	EN61547, EN61000-4-2,3,4,5,6,8,11, surge immunity Line-Line 1KV							
Others	**MTBF**	193.6K hrs min. @ 230VAC full load and 25°C ambient temperature							
	Dimension	170*53.4*28mm (L*W*H)							
	Warranty	5 years							

Product Dimension

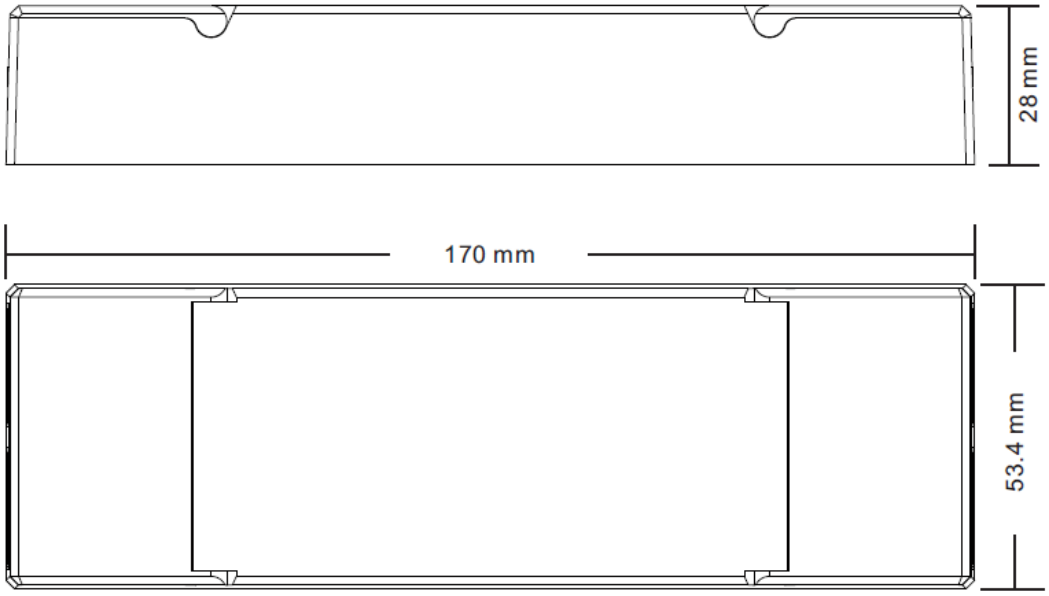

Wiring diagramm

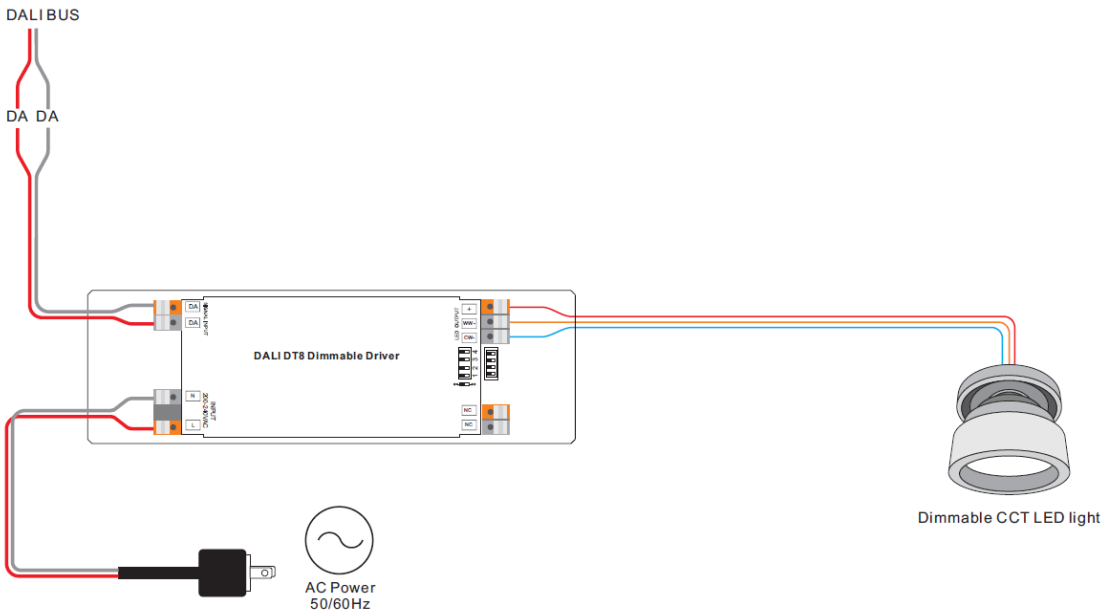

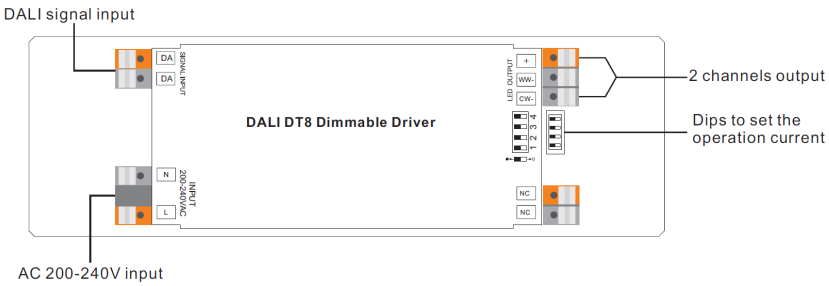

Dips to set the operation current

	1	2	3	4		1	2	3	4
250mA	●	●	●	●	650mA	○	●	●	●
300mA	●	●	●	○	700mA	○	●	●	○
350mA	●	●	○	●	750mA	○	●	○	●
400mA	●	●	○	○	800mA	○	●	○	○
450mA	●	○	●	●	850mA	○	○	●	●
500mA	●	○	●	○	900mA	○	○	●	○
550mA	●	○	○	●	950mA	○	○	○	●
600mA	●	○	○	○	1000mA	○	○	○	○

Installation

SAFETY AND WARNINGS

- ***Do not install with power applied to the device***
- ***Do not set operation current with power applied to the device***
- ***Do not expose the device to moisture***
- ***Drivers with PWM dimming can cause noise due to vibrations. These can be generated by vibrating components in the device as well as by resonant vibrations from other bodies.***

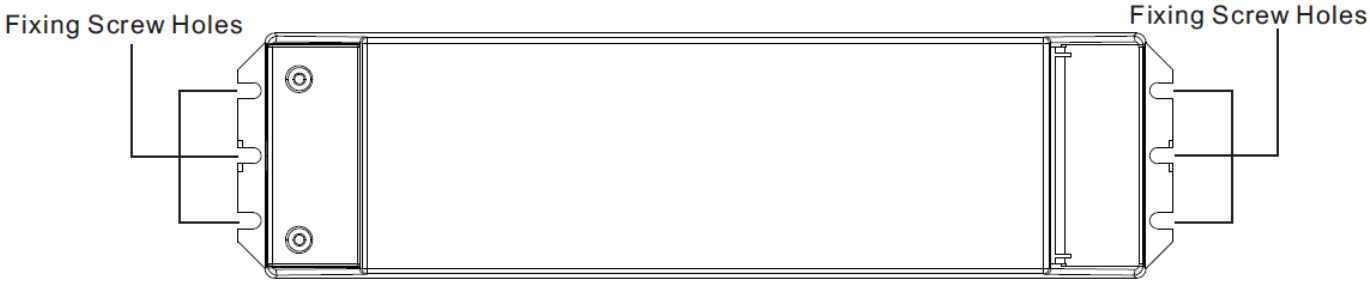

- Approved wire diameter: AWG16—AWG20 / 0.5mm^2-1.5mm^2

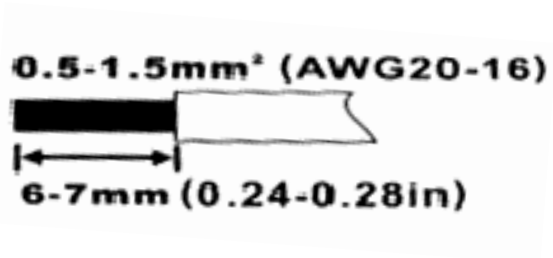

Operation

DALI Adress assigned by DALI Masters

DALI address can also be assigned by DALI Master controller automatically, please refer to user manuals of compatible DALI Masters for specific operations.

Once an address is assigned, all two channels' address will be the same. For example, if the driver is addressed to 22, then CH1 and CH2 will be the same address 22.

Important Information for installation

Power on level is a DALI parameter that defines the level of a control gear after power is restored. The factory default power on level for this driver is 100, which means the driver will be at 100% intensity when power is restored.

Troubleshooting Help

Situation A: The power supply has been overloaded and is now in overload protection mode.

What does the error pattern look like?

The connected LEDs flash. You can reduce the brightness via a DALI software and the strip will stop flashing. You can no longer control the colours with the software.

How can the problem be solved (two variants A + B)?

A.
1. Disconnect the device from the mains for at least 10 minutes. The unit will reset to factory settings.
2. Reduce the load so that it meets the specifications of the unit.
3. You can now operate the unit normally again.

B
1. Disconnect the device from the mains for at least 10 minutes. The unit will reset to the factory settings.
2. Disconnect the load (LED strip / LED module) from the power supply.
3. Reconnect the device to the mains.
4. Connect the device to the DALI Master software.
5. In the software, reduce the Power On Level and the maximum level for this device. The value must be below the maximum load of the power supply.
6. Disconnect the device from the power supply and reattach the load.
7. You can now operate the device normally again.