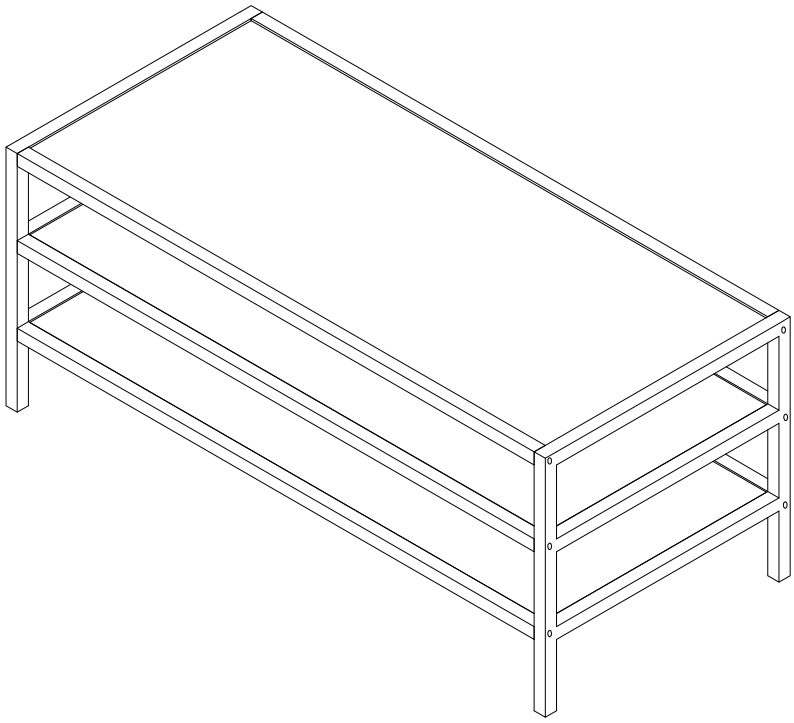

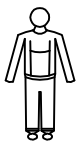

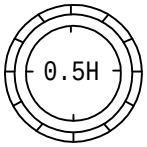
0.5H

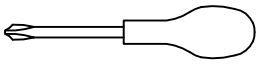

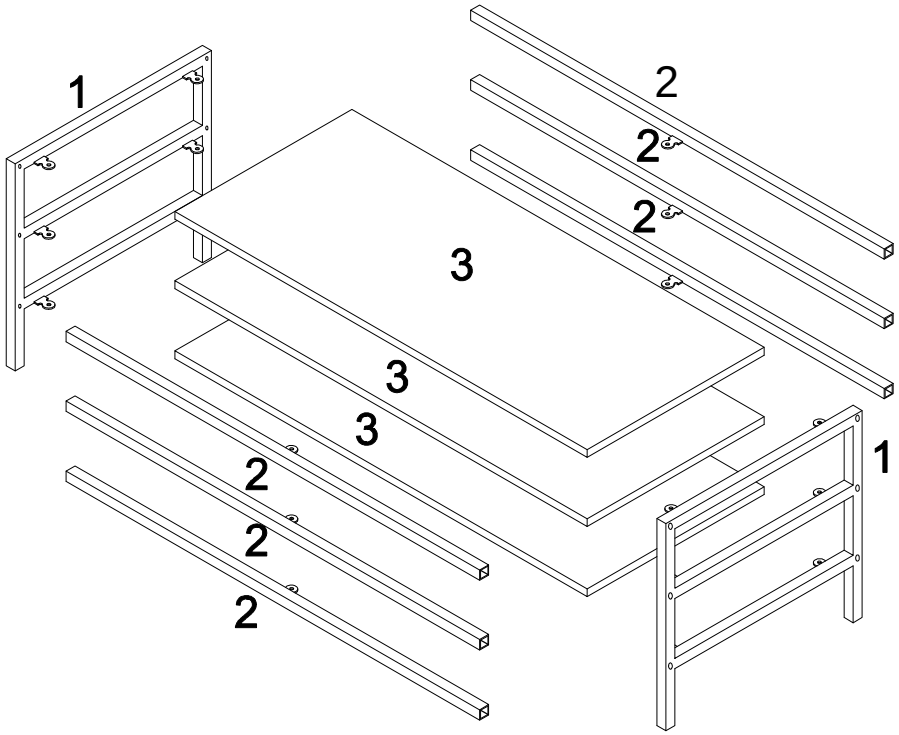

1 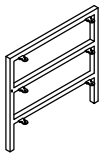 2PCS	2 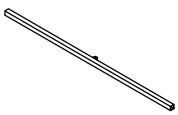 6PCS	3 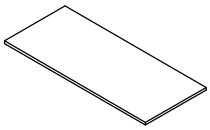 3PCS
A M6×15mm 12PCS	B 4×10mm 18PCS	C 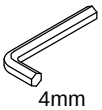 4mm 1PC

Step 1

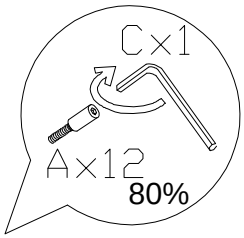

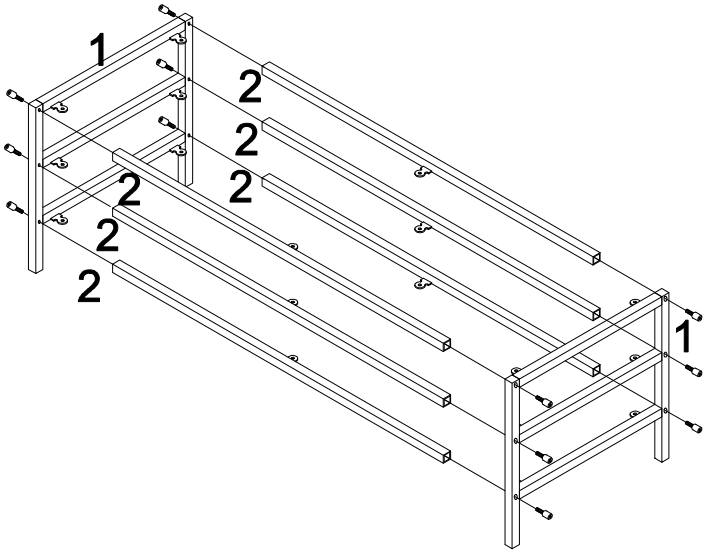

A

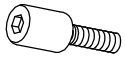

M6×15mm

12PCS

Step 2

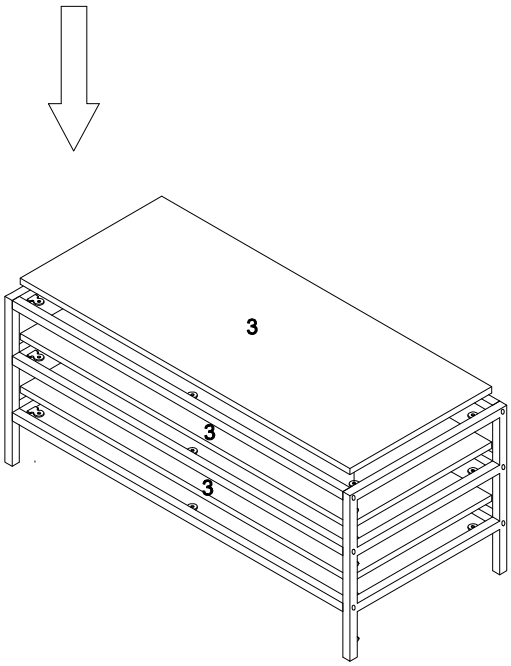

Step 3

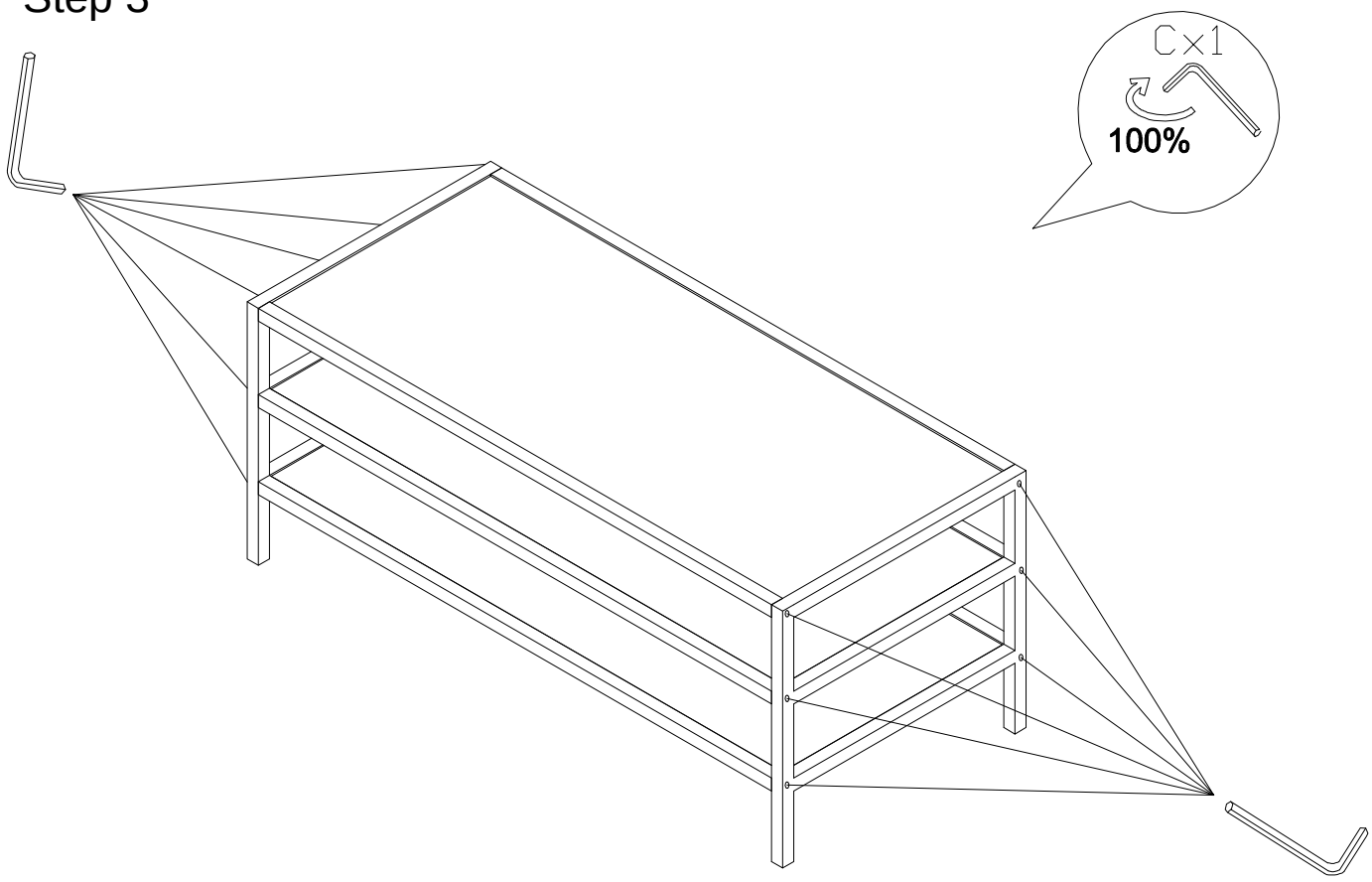

Step 4

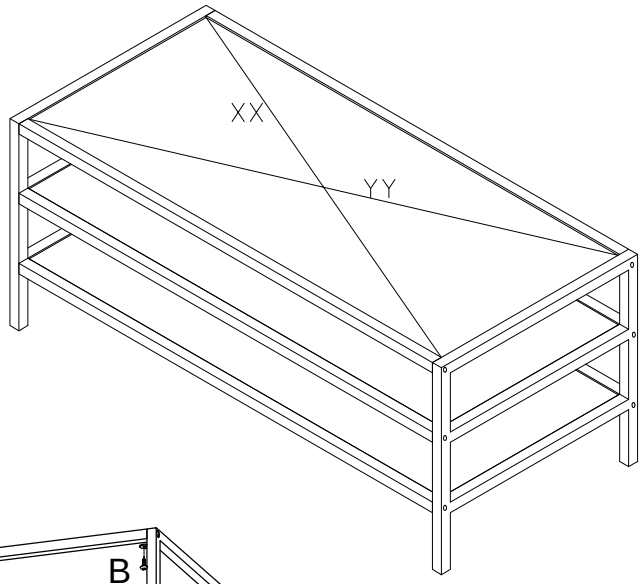

XX=YY

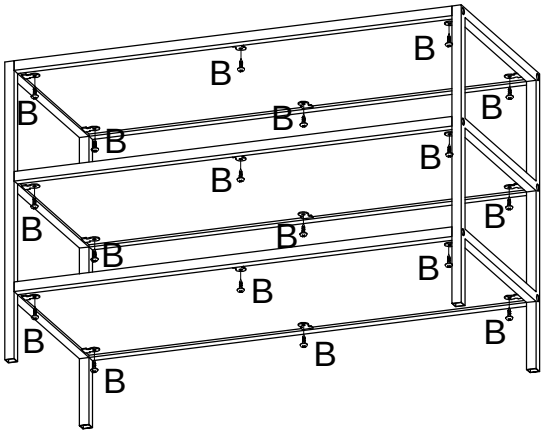

B

4×10mm

18PCS